集成电路原理与设计
单级放大器

谭志超
zhichaotan@zju.edu.cn

Outline

- General Consideration
- Common-Source Stage
  - CS Stage with Resistive Load
  - CS Stage with Diode-Connected Load
  - CS Stage with Current-Source Load
  - CS Stage with Source Degeneration
- Source Follower
- Common-Gate Stage

Outline

- General Consideration
- Common-Source Stage
  - CS Stage with Resistive Load
  - CS Stage with Diode-Connected Load
  - CS Stage with Current-Source Load
  - CS Stage with Source Degeneration
- Source Follower
- Common-Gate Stage

Amplifier: Ideal vs. Non-ideal

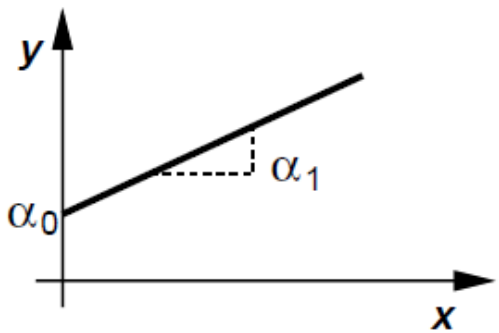

Ideal amplifier: $y(t) = a_0 + a_1 x(t)$

- Large-signal characteristic is **a straight line**
- α_1: the "gain"
- α_0: the "DC bias"

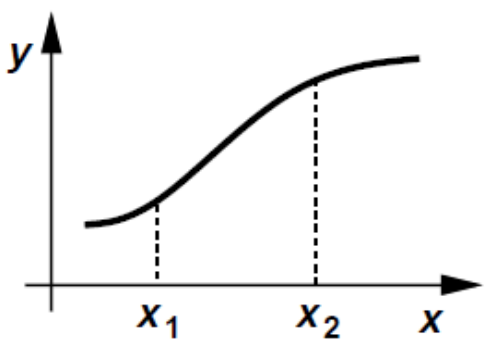

Nonlinear amplifier

$$y(t) = a_0 + a_1 x(t) + a_2 x^2(t) + \ldots + a_n x^n(t)$$

- Large signal excursions around bias point
- Varying "gain", approximated by polynomial
- Causes distortion of signal of interest
- In a sufficiently narrow range, *x* varies very little, and

$$\Delta y(t) = a_1 \Delta x(t)$$

Analog Design Octagon

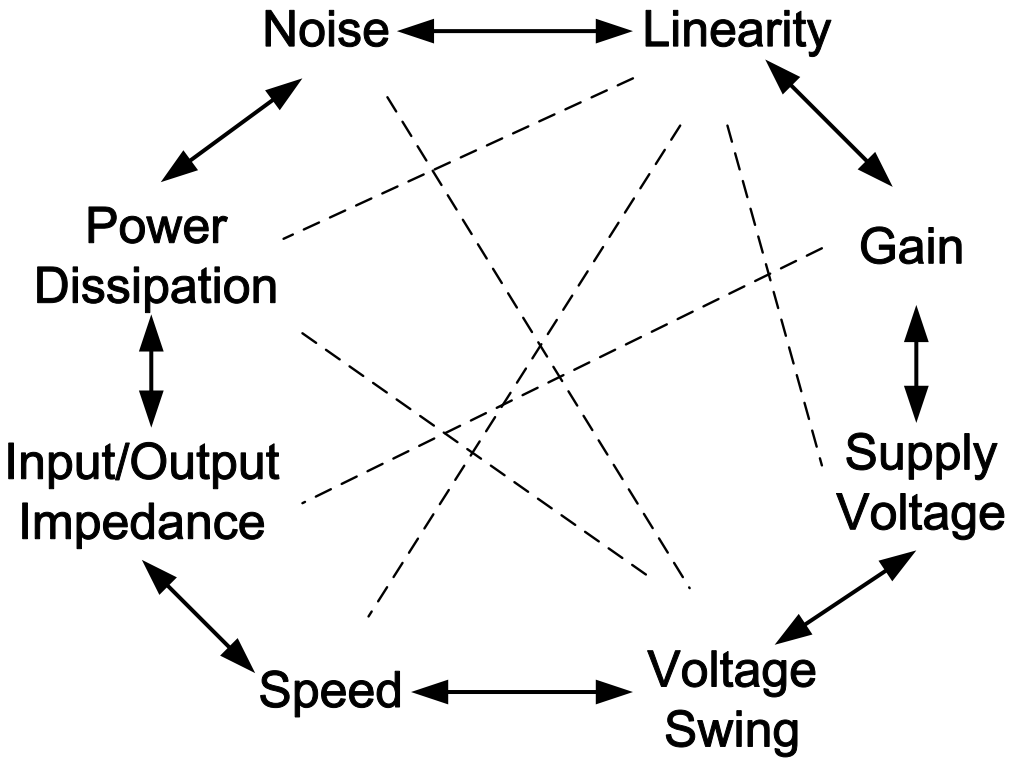

- Performance parameters trade with each other
- Multi-dimensional optimization problem

Single-Stage Amplifier

Common-Source Stage	Source Follower	Common-Gate Stage	Cascode
With Resistive Load	With Resistive Bias	With Resistive Load	Telescopic
With Diode-Connected Load	With Current-Source Bias	With Current-Source Load	Folded
With Current-Source Load			
With Active Load			
With Source Degeneration			

Common source

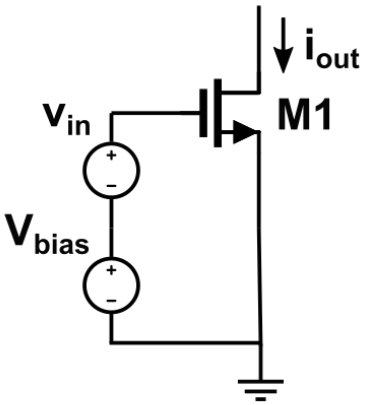

$i_{out} = g_m v_{in}$

Common drain

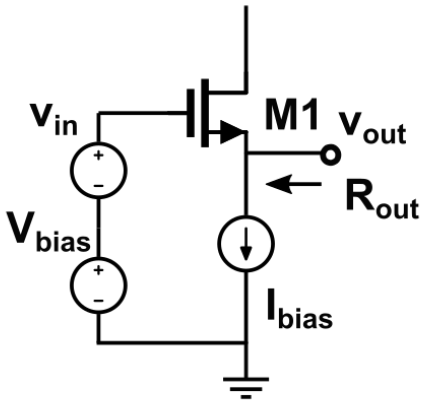

vout = vin

$R_{out} \approx 1/g_m$

Common gate

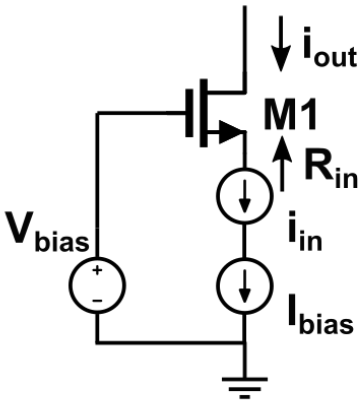

$i_{out} = i_{in}$

$R_{in} \approx 1/g_m$

Outline

- General Consideration
- Common-Source Stage
  - CS Stage with Resistive Load
  - CS Stage with Diode-Connected Load
  - CS Stage with Current-Source Load
  - CS Stage with Source Degeneration
- Source Follower
- Common-Gate Stage

CS Stage with Resistive Load

- Common-Source Amplifier：
- Input voltage: V_{GS}
- Output voltage: V_{DS}

$$V_{GS} \xrightarrow{g_m} I_{DS} \xrightarrow{R_D} V_{DS}$$

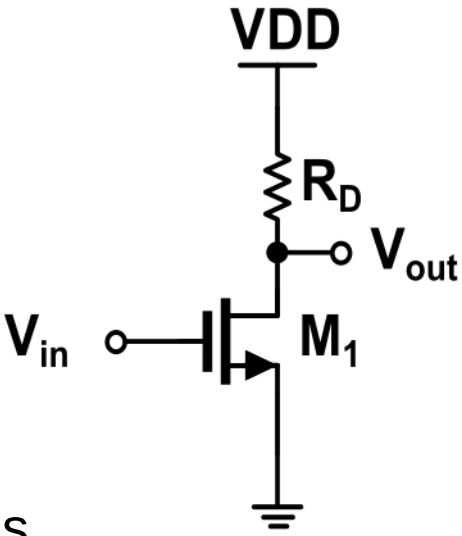

- Very high input impedance at low frequencies

- Two Kinds of Analysis Method
  - Large-signal Analysis
  - Small-signal Analysis

Large-signal Analysis

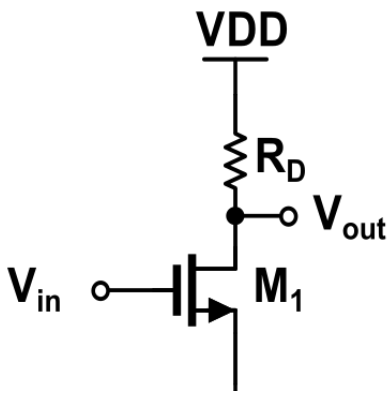

V_{in} increases from 0

① $V_{in} < V_{TH}$: M_1--off, $I_D = 0$, $V_{out} = V_{DD}$

② $V_{in} > V_{TH}$: $V_{out} = V_{DS} > V_{in} - V_{TH}$

M_1--saturation region,

$$V_{out} = V_{DD} - \frac{1}{2}\mu_n C_{ox}\frac{W}{L}\left(V_{in} - V_{TH}\right)^2 R_D$$

$V_{in}\uparrow$, $V_{out}\downarrow$

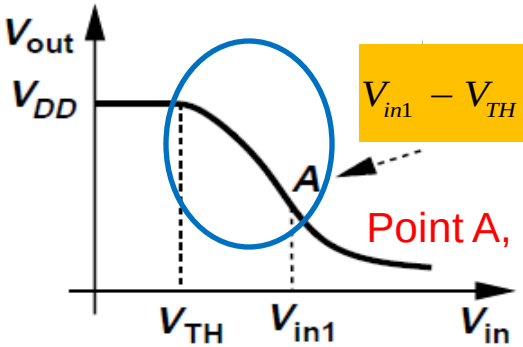

$$V_{in1} - V_{TH} = V_{DD} - R_D\frac{1}{2}\mu_n C_{ox}\frac{W}{L}\left(V_{in1} - V_{TH}\right)^2$$

Point A, $V_{out} = V_{in1} - V_{TH}$

③ $V_{in} > V_{in1}$: M_1-- triode region

$$V_{out} = V_{DD} - \frac{1}{2}\mu_n C_{ox}\frac{W}{L}\left[2\left(V_{in} - V_{TH}\right)V_{out} - V_{out}^2\right]R_D$$

④ V_{in} is high enough: M_1--deep triode region

$V_{out} << 2(V_{in} - V_{TH})$

$$V_{out} = \frac{R_{on}}{R_{on} + R_D}V_{DD} = \frac{V_{DD}}{1 + \mu_n C_{ox}\frac{W}{L}R_D\left(V_{in} - V_{TH}\right)}$$

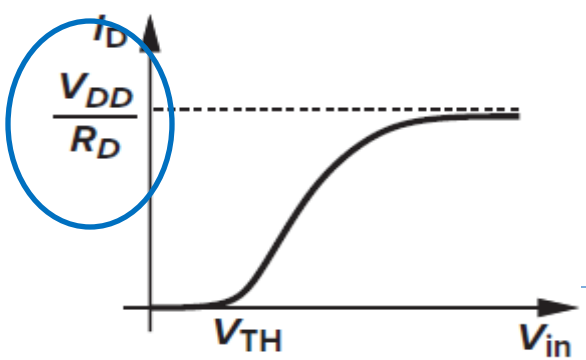

Large-signal Analysis

- **In saturation region, small-signal gain:**

$$V_{out} = V_{DD} - \frac{1}{2}\mu_n C_{ox}\frac{W}{L}\left(V_{in} - V_{TH}\right)^2 R_D$$

$$\boxed{A_v = \frac{\partial V_{out}}{\partial V_{in}} = -\mu_n C_{ox}\frac{W}{L}\left(V_{in} - V_{TH}\right)R_D = -g_m R_D}$$

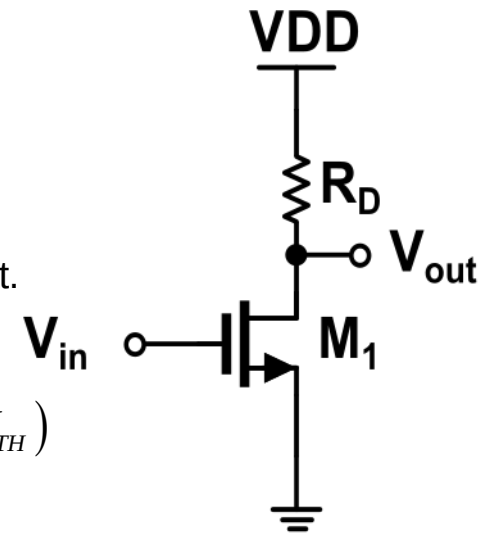

- A_v increases linearly with V_{in};
- When the signal swing of V_{in} is large, non-linearity is an undesirable effect.

- ***g_m with the input voltage***

Saturation: $$g_m = \mu_n C_{ox}\frac{W}{L}R_D\left(V_{GS} - V_{TH}\right) = \mu_n C_{ox}\frac{W}{L}R_D\left(V_{in} - V_{TH}\right)$$

Linear: $$g_m = \mu_n C_{ox}\frac{W}{L}V_{DS} = \mu_n C_{ox}\frac{W}{L}V_{out}$$

$$V_{out} = V_{DD} - R_D\frac{1}{2}\mu_n C_{ox}\frac{W}{L}\left[2\left(V_{in} - V_{TH}\right)V_{out} - V_{out}^2\right]$$

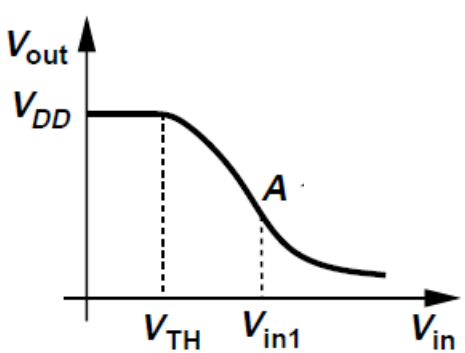

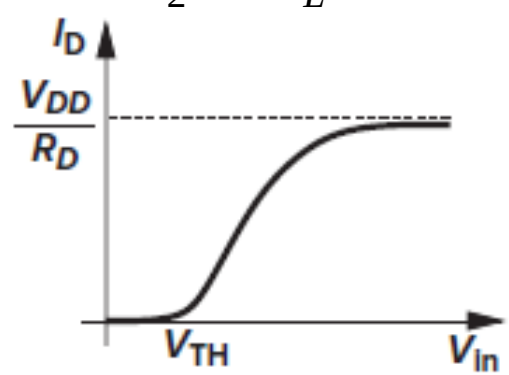

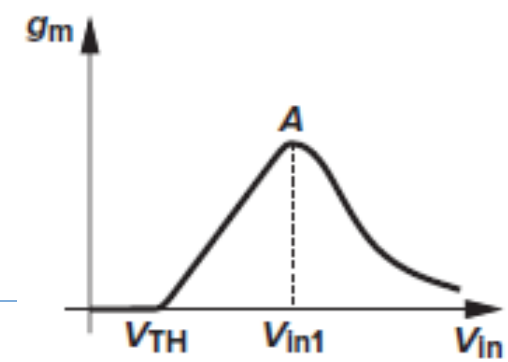

How to maximize the gain?

$$A_v = -g_m R_D = -\sqrt{2\mu_n C_{ox} \frac{W}{L} I_D} \frac{V_{RD}}{I_D} = -\sqrt{2\mu_n C_{ox} \frac{W}{L}} \frac{V_{RD}}{\sqrt{I_D}}$$

- Increase W/L: **Parasitic capacitance**
- Increase V_{RD}: **Output swing decrease**
- Decrease I_D: **The circuit get slower**

Trade-off: Gain, bandwidth and voltage swing!

Channel length modulation:

$$V_{out} = V_{DD} - \frac{1}{2}\mu_n C_{ox}\frac{W}{L}\left(V_{in} - V_{TH}\right)^2\left(1 + \lambda V_{out}\right)R_D$$

$$r_O = \frac{1}{\lambda I_D}$$

$$A_v = \frac{\partial V_{out}}{\partial V_{in}} = -g_m\frac{r_O R_D}{r_O + R_D} = -g_m\left(r_O \parallel R_D\right)$$

$$g_m\uparrow, R_D\uparrow \Rightarrow A_V\uparrow$$

Small-signal Analysis

- Including channel-length modulation of M_1

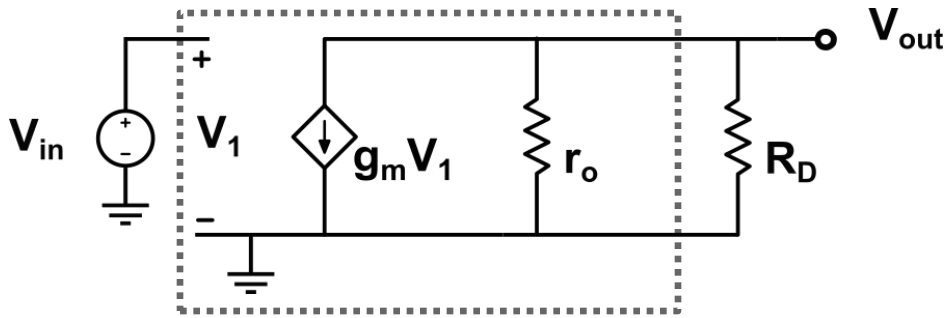

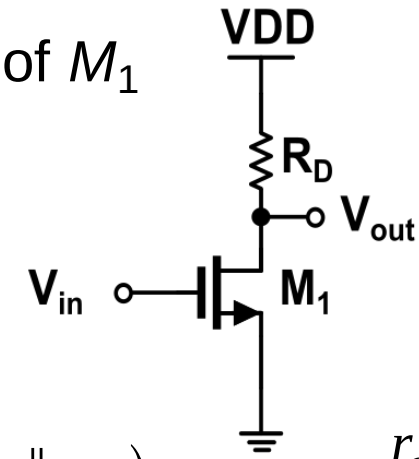

$$V_{out} = -g_m V_1 \left(r_O \| R_D\right)$$

$V_{in}=V_1$

$$A_v = -g_m \left(r_O \| R_D\right) = -g_m \frac{r_O R_D}{r_O + R_D}$$

$$= -g_m R_{out}$$

- **Output impedance:**
  - When zero input, apply voltage at output and get output current

$V_{in}=0$

$$\frac{V_o}{I_o} = \left(r_O \| R_D\right)$$

$$R_{out} = \left(r_O \| R_D\right)$$

if $\lambda=0$, $r_o=\infty$ $\quad R_{out} = R_D$

Example

Ideal Current Source Load. M1 is biased in saturation

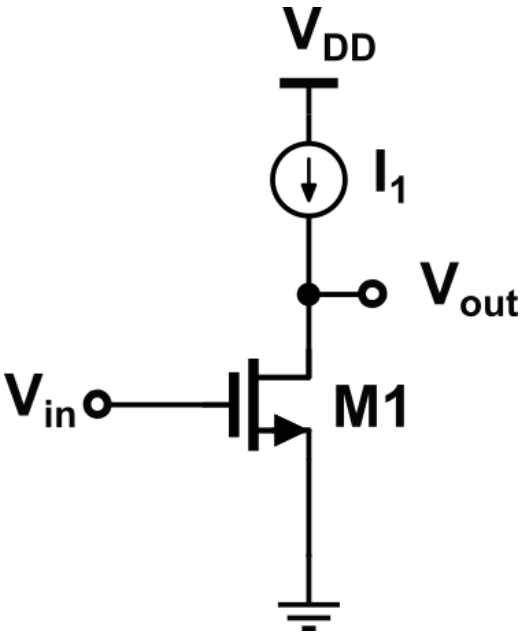

$$R_D \rightarrow \infty$$

$$A_v = -g_m \left(R_D \| r_O \right) = -g_m r_O$$

☐ *Intrinsic Gain:*

- ☐ **<u>the maximum voltage gain that can be achieved using a single device.</u>**

$$I_{D1} = \frac{1}{2} \mu_n C_{ox} \frac{W}{L} \left(V_{in} - V_{TH} \right)^2 \left(1 + \lambda V_{out} \right) = I_1$$

$V_{in} \uparrow$ $\qquad$ $V_{out} \downarrow\downarrow$

How to improve?

- Disadvantage of CS with resistive load
  - Be difficult to fabricate resistors with tightly-controlled value
  - Limited resistor value, reduce the swing of output
  - A reasonable physical size
- How to improve ?
  - Resistor -> **MOS device**
    - Diode-connected load
    - Current source
    - MOS in triode load
    - ……

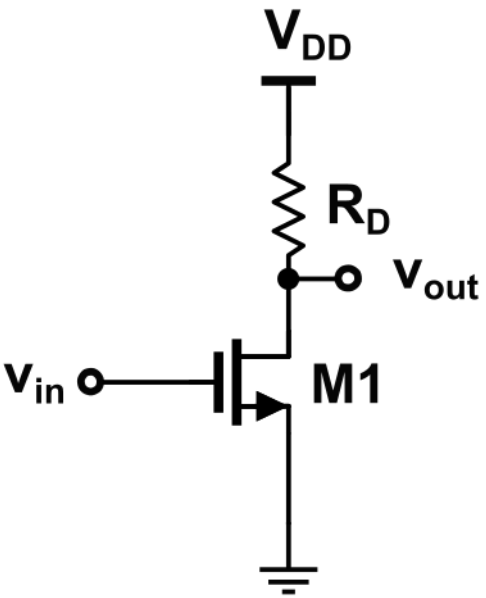

CS Stage with Diode-Connected

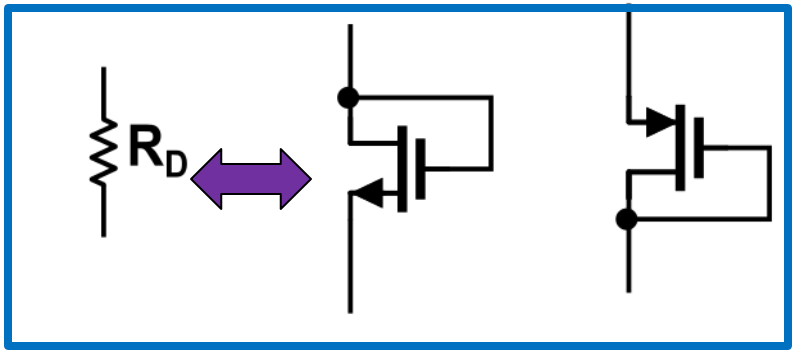

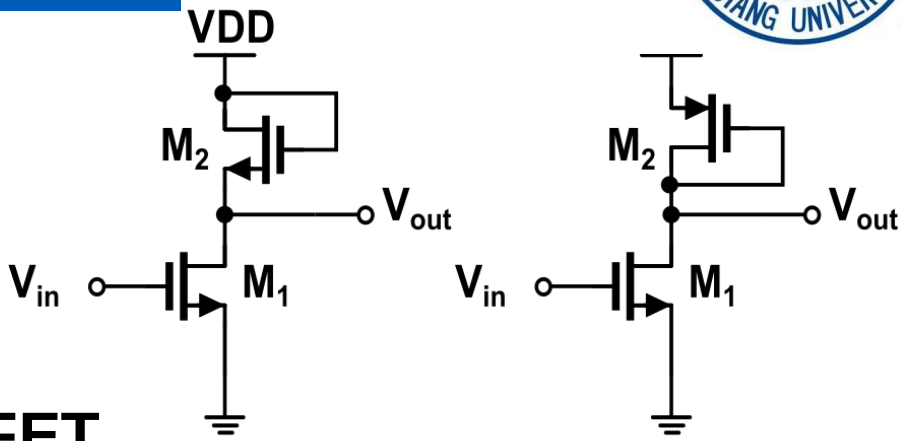

☐ Diode-Connected MOSFET

- ☐ the gate and drain are shorted -> **transistor always operates in saturation**
- ☐ as a small-signal resistor (**Active Resistor**)
- ☐ a "diode-connected" device

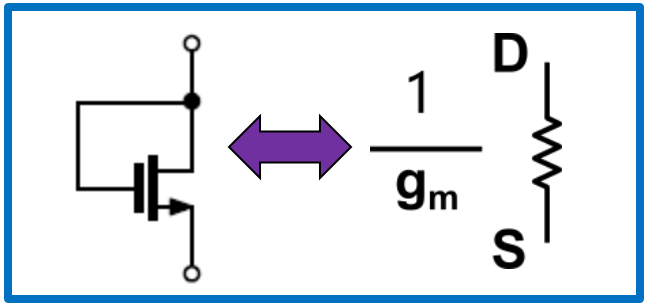

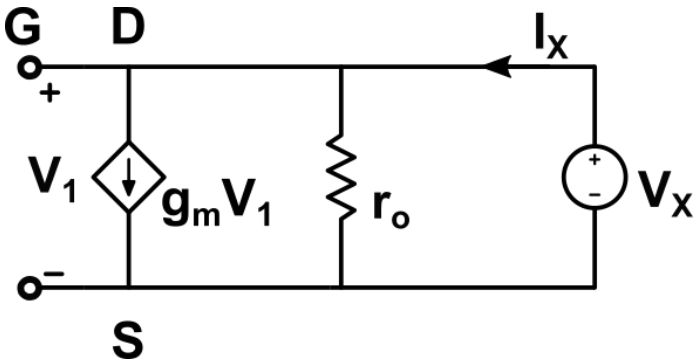

Measure of the Equivalent Impedance

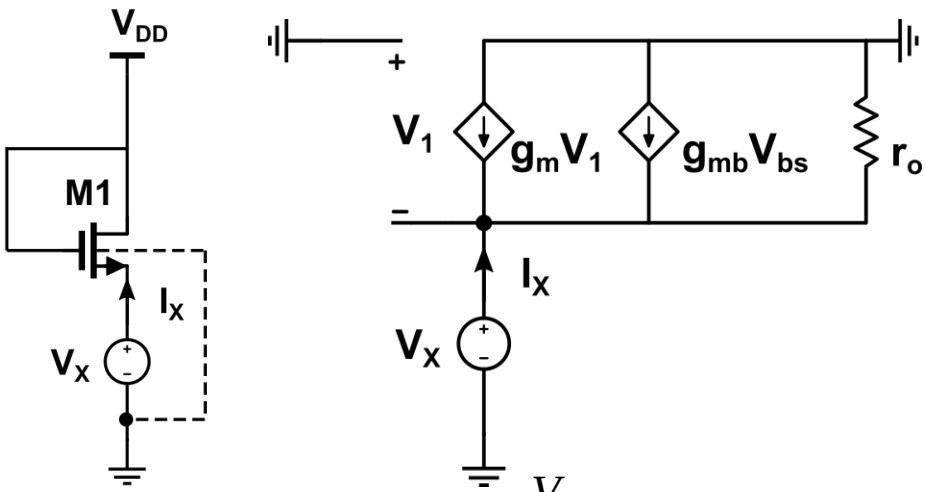

$$V_1 = -V_X$$

$$V_{bs} = -V_X$$

$$\left(g_m + g_{mb}\right)V_X + \frac{V_X}{r_O} = I_X$$

$$\frac{V_X}{I_X} = \frac{1}{g_m + g_{mb} + r_O^{-1}} = \frac{1}{g_m + g_{mb}} //r_O$$

$$R_X \approx \frac{1}{g_m + g_{mb}}$$

(g_m>>g_{mbs}, g_m>>$1/r_O$)

CS with Diode-Connected Load: NMOS

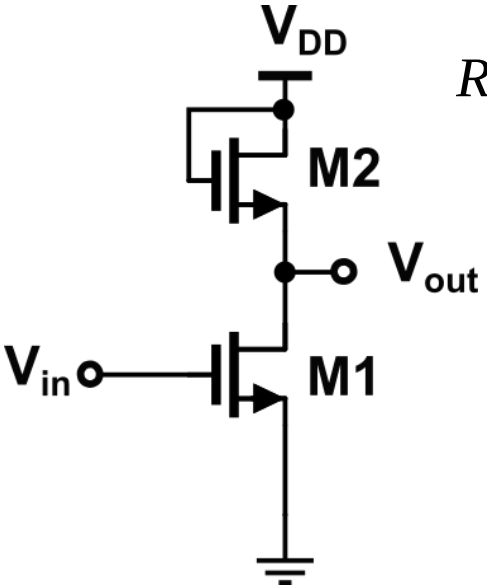

$$R_D \Leftrightarrow \frac{1}{g_{m2}} // \frac{1}{g_{mb2}}$$

$$\boxed{R_{out} = \left(\frac{1}{g_{m2}} // \frac{1}{g_{mb2}}\right) // r_{O1} \approx \frac{1}{g_{m2}} // \frac{1}{g_{mb2}}}$$

$$A_v \approx \frac{-g_{m1}}{g_{m2} + g_{mb2}} = -\frac{g_{m1}}{g_{m2}} \frac{1}{1+\eta} \qquad \eta = g_{mb2}/g_{m2}$$

$$A_v = -\sqrt{\frac{2\mu_n C_{ox} (W/L)_1 I_{D1}}{2\mu_n C_{ox} (W/L)_2 I_{D2}}} \frac{1}{1+\eta} = -\sqrt{\frac{(W/L)_1}{(W/L)_2}} \frac{1}{1+\eta}$$

If η is neglected

Body-effect !

- the gain is independent of the bias current and voltages
  - *As the input and output signal levels vary, the gain remains relative constant*
- the gain is decided by the ratio of (W/L) of M_1 and M_2
- the input-output characteristic is relatively linear

Large-signal Analysis

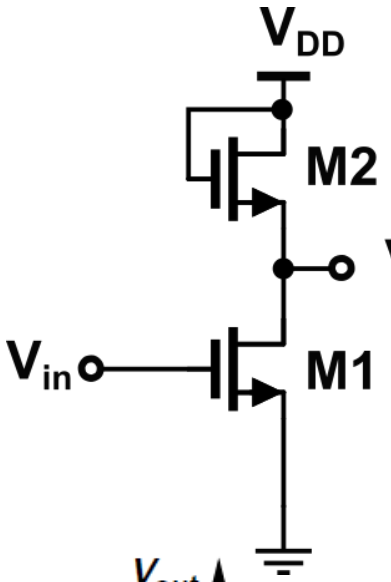

- $V_{in} < V_{TH1}$: $V_{out} = V_{DD} - V_{TH2}$
- $V_{in} > V_{TH1}$, M_1 and M_2 in saturation region, V_{out} approximately follows a single line

$$\frac{1}{2}\mu_n C_{ox}\left(\frac{W}{L}\right)_1 (V_{in} - V_{TH1})^2 = \frac{1}{2}\mu_n C_{ox}\left(\frac{W}{L}\right)_2 (V_{DD} - V_{out} - V_{TH2})^2$$

$$\sqrt{\left(\frac{W}{L}\right)_1}(V_{in} - V_{TH1}) = \sqrt{\left(\frac{W}{L}\right)_2}(V_{DD} - V_{out} - V_{TH2})$$

- If V_{TH2} does not vary much with V_{out}, input-output characteristic is relatively linear.

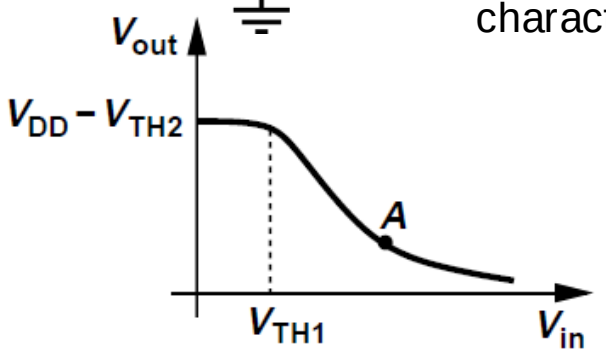

$$\sqrt{\left(\frac{W}{L}\right)_1} = \sqrt{\left(\frac{W}{L}\right)_2}\left(-\frac{\partial V_{out}}{\partial V_{in}} - \frac{\partial V_{TH2}}{\partial V_{in}}\right)$$

$$\partial V_{TH2}/\partial V_{in} = (\partial V_{TH2}/\partial V_{out})(\partial V_{out}/\partial V_{in}) = \eta(\partial V_{out}/\partial V_{in})$$

$$\frac{\partial V_{out}}{\partial V_{in}} = -\sqrt{\frac{(W/L)_1}{(W/L)_2}}\frac{1}{1+\eta}$$

- $V_{in} > V_{out} + V_{TH1}$, M_1 enters the triode region => the characteristic becomes nonlinear

CS with Diode-Connected Load -- PMOS

☐ *Transfer function*

Free of body-effect !

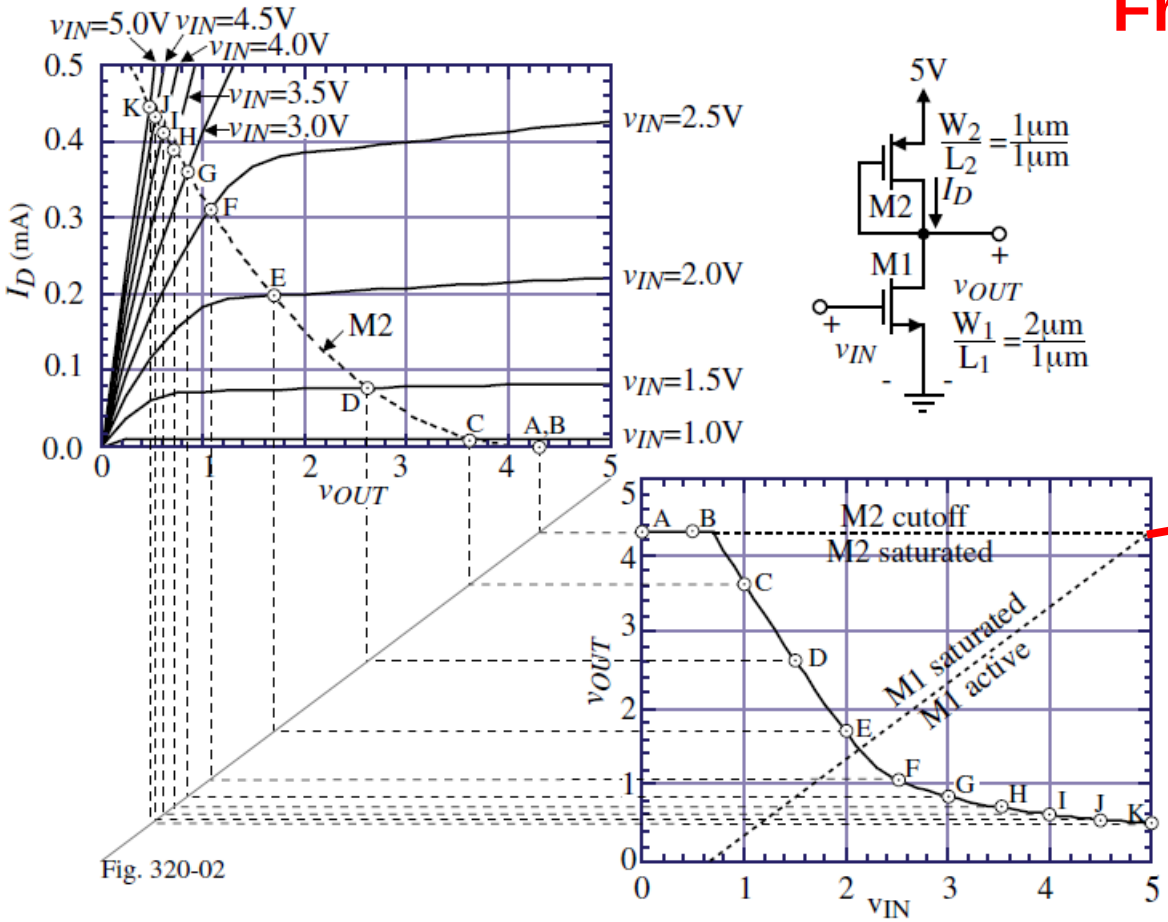

Fig. 320-02

$$v_{DS1} \geq v_{GS1} - V_{TN}$$

$$v_{OUT} \geq v_{IN} - 0.7V$$

Small-signal Analysis

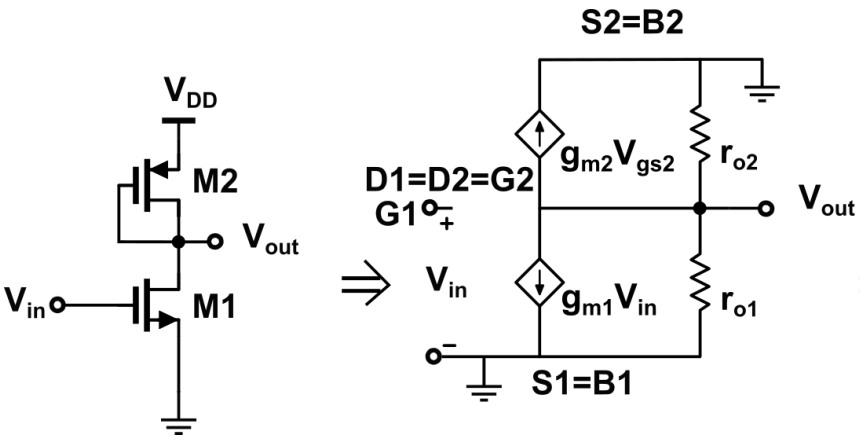

$$g_{m1}v_{in} + g_{ds1}v_{out} + g_{m2}v_{out} + g_{ds2}v_{out} = 0$$

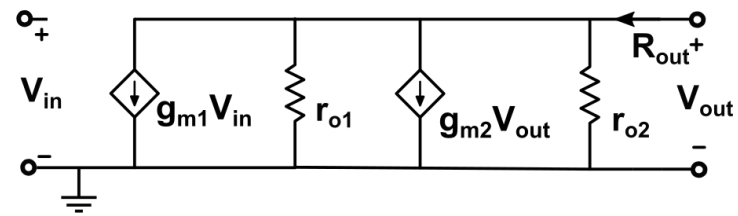

$$\frac{v_{out}}{v_{in}} = \frac{-g_{m1}}{g_{O1} + g_{O2} + g_{m2}}$$

$$R_{out} = \frac{1}{g_{O1} + g_{O2} + g_{m2}} = \frac{1}{g_{m2}} // r_{O1} // r_{O2} \approx \frac{1}{g_{m2}}$$

$$A_v = \frac{-g_{m1}}{g_{O1} + g_{O2} + g_{m2}} \approx -\frac{g_{m1}}{g_{m2}} = -\sqrt{\frac{\mu_n (W/L)_1}{\mu_p (W/L)_2}}$$

$$A_v = -g_{m1}R_{out}$$

- Gain is a relatively weak function of device dimensions
- High gain => $(W/L)_1 >> (W/L)_2$
- =>disproportionately wide or long transistor (large input or load capacitor)
  reduction in allowable voltage swing

CS Stage with Current Source Load

- Current-source load allows a high load resistance without limiting output swing

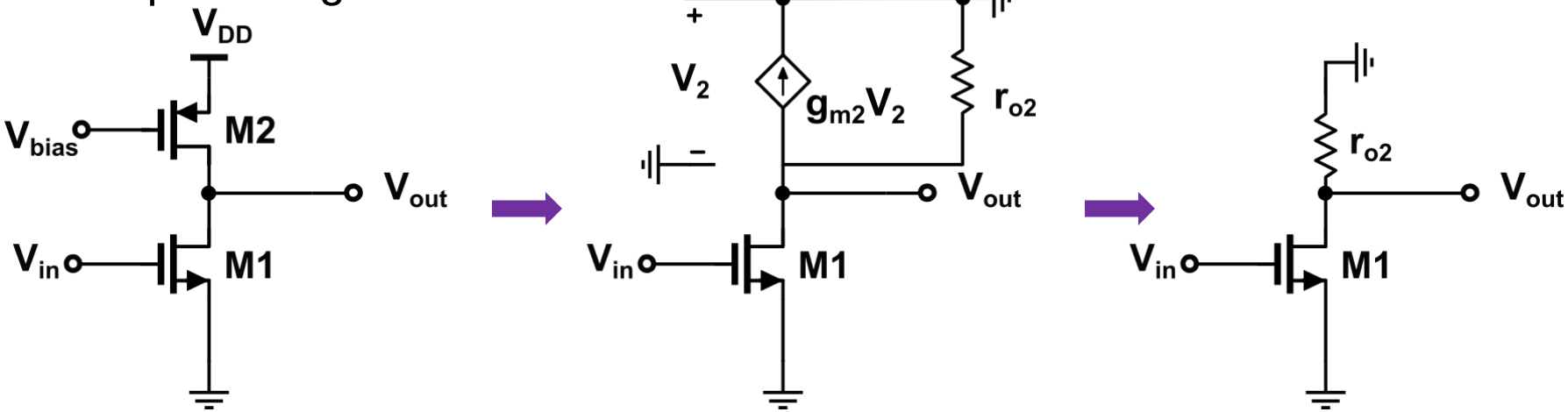

$$r_{out} = r_{O1} // r_{O2}$$

$$A_v = -g_{m1} r_{out} = -g_{m1}\left(r_{O1} // r_{O2}\right)$$

- Longer transistors yield a higher voltage gain

r_{o2} can be increased by increasing its length $\because L\uparrow, \lambda\downarrow \Rightarrow r_o\uparrow \Rightarrow A_V\uparrow$

CS Stage with Current Source Load

$$A_v = -g_{m1} r_{out} = -g_{m1}\left(r_{O1} // r_{O2}\right)$$

- For M_2, $I = \frac{1}{2}\mu_n C_{OX}\frac{W}{L}V_{ON}^2 = \frac{1}{2}\beta V_{ON}^2 \propto \frac{W}{L}V_{ON}^2$

  -- if I is constant, $W_2\uparrow$ -> $V_{ON2}\downarrow$ $V_{DS2,sat} \approx V_{ON2}$, $V_{out(max)}$ is large

  200~300 mV

  -- $W_2\uparrow$ $L_2\uparrow$ -> parasitic capacitor of $M_2\uparrow$

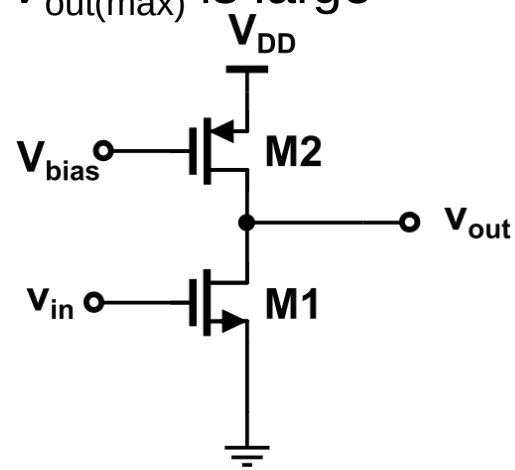

- For M_1,
  - I is constant,

$$g_m = \sqrt{2\beta I_D} \qquad \left(\frac{W}{L}\right)_1 \uparrow \Rightarrow g_{m1}\uparrow$$

$$\text{Q } I = \frac{1}{2}\beta V_{ON}^2 \qquad \left(\frac{W}{L}\right)_1 \uparrow \Rightarrow V_{ON}\downarrow$$

Transfer function

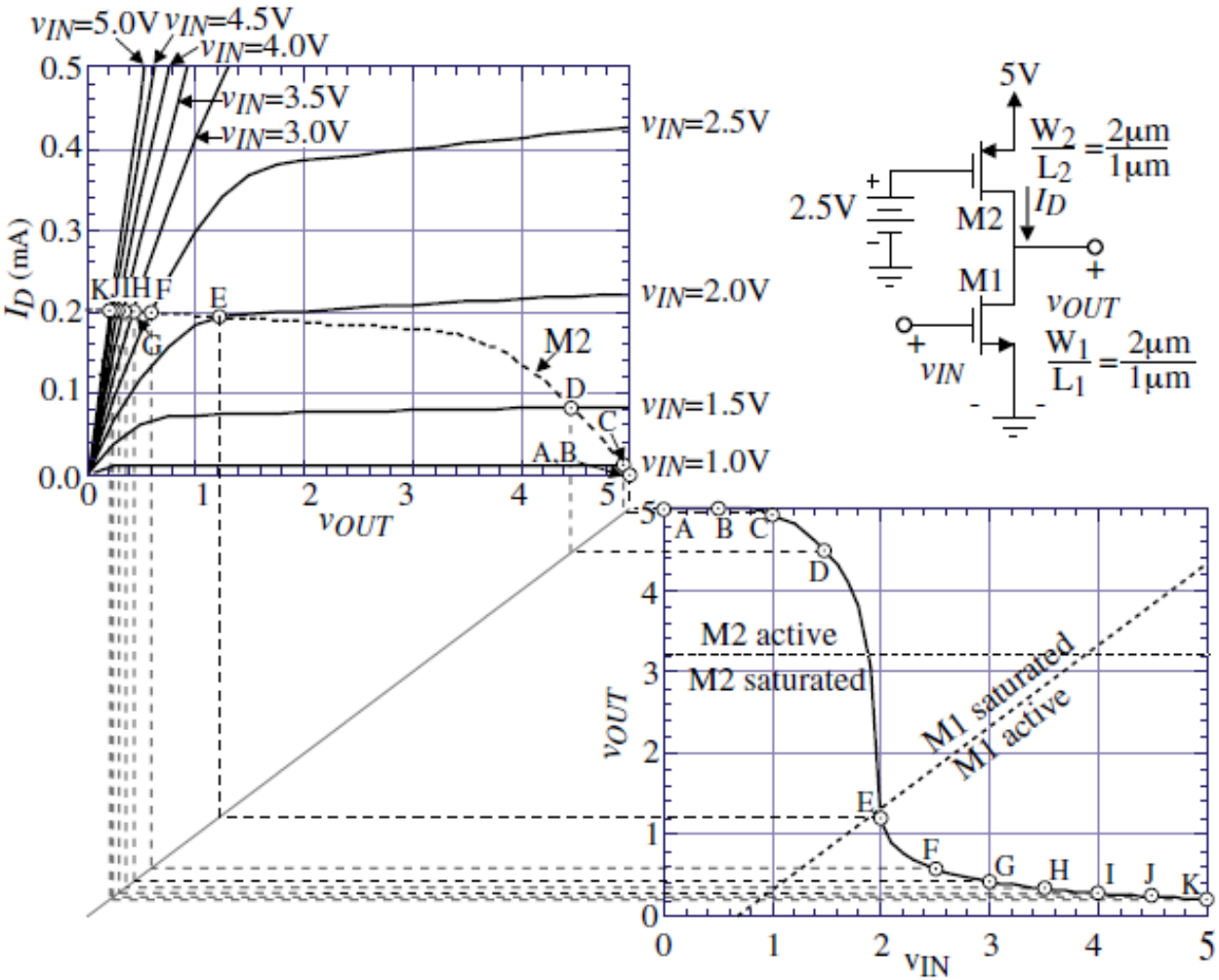

Small-signal Performance

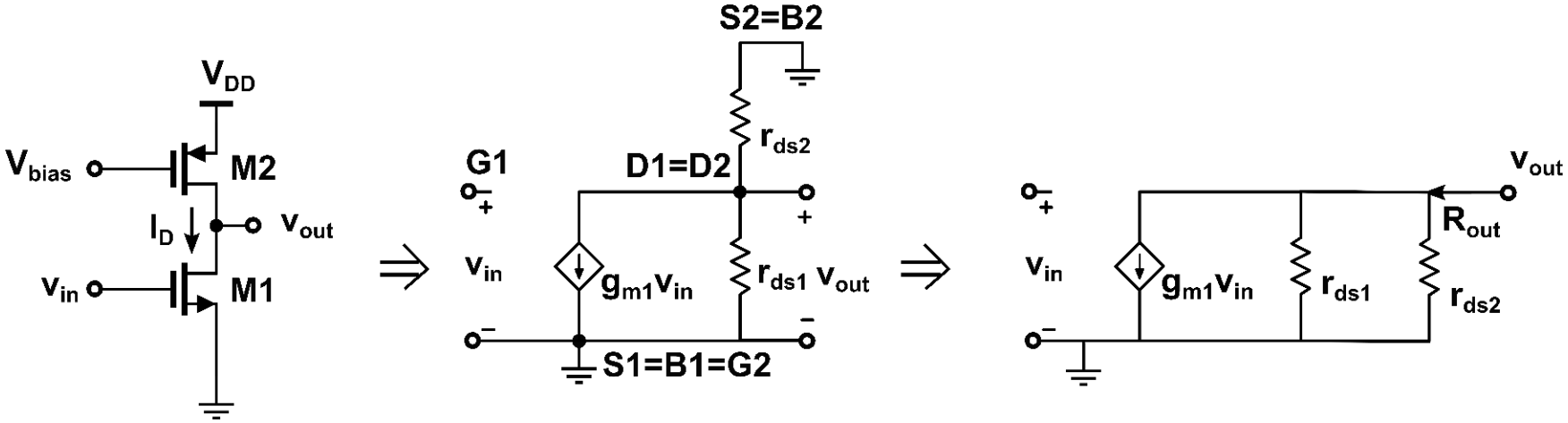

$$\frac{v_{out}}{v_{in}} = \frac{-g_{m1}}{g_{ds1}+g_{ds2}} = \left(\frac{2K'_N W_1}{L_1 I_D}\right)^{1/2}\left(\frac{-1}{\lambda_1+\lambda_2}\right) \propto \frac{1}{\sqrt{I_D}} \text{!!!} \quad \text{and } R_{out} = \frac{1}{g_{ds1}+g_{ds2}} \cong \frac{1}{I_D(\lambda_1+\lambda_2)}$$

$$\boxed{A_v = -g_{m1}R_{out} = -g_{m1}\left(r_{o1} \| r_{o2}\right)}$$

Summary

Summary of CMOS Inverting Amplifiers

Inverter	AC Voltage Gain	AC Output Resistance	Bandwidth ($C_{GB}=0$)
p-channel active load inverter	$\frac{-g_{m1}}{g_{m2}}$	$\frac{1}{g_{m2}}$	$\frac{g_{m2}}{C_{BD1}+C_{GS1}+C_{GS2}+C_{BD2}}$
n-channel active load inverter	$\frac{-g_{m1}}{g_{m2}+g_{mb2}}$	$\frac{1}{g_{m2}+g_{mb2}}$	$\frac{g_{m2}+g_{mb2}}{C_{BD1}+C_{GD1}+C_{GS2}+C_{BS2}}$
Current source load inverter	$\frac{-g_{m1}}{g_{ds1}+g_{ds2}}$	$\frac{1}{g_{ds1}+g_{ds2}}$	$\frac{g_{ds1}+g_{ds2}}{C_{BD1}+C_{GD1}+C_{DG2}+C_{BD2}}$
n-channel depletion load inverter	$\sim\frac{-g_{m1}}{g_{mb2}}$	$\frac{1}{g_{mb2}+g_{ds1}+g_{ds2}}$	$\frac{g_{mb2}+g_{ds1}+g_{ds2}}{C_{BD1}+C_{GD1}+C_{GS2}+C_{BD2}}$
Push-Pull inverter	$\frac{-(g_{m1}+g_{m2})}{g_{ds1}+g_{ds2}}$	$\frac{1}{g_{ds1}+g_{ds2}}$	$\frac{g_{ds1}+g_{ds2}}{C_{BD1}+C_{GD1}+C_{GS2}+C_{BD2}}$

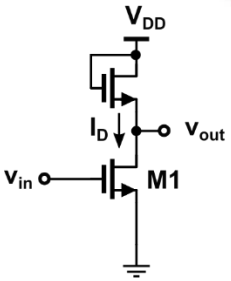

Active NMOS Load Inverter

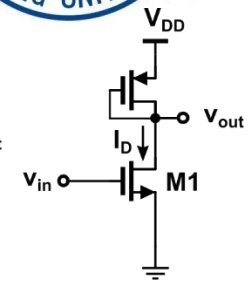

Active PMOS Load Inverter

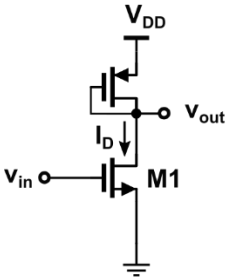

Depletion NMOS Load Inverter

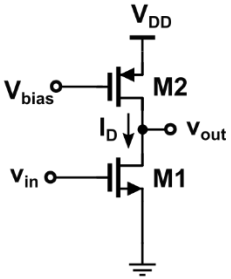

Current Source Load Inverter

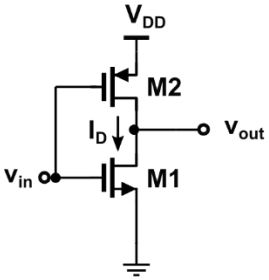

Push-pull Inverter

CS Stage with Source Degeneration

- Nonlinearity of circuit is due to nonlinear dependence of I_D upon V_{ON}

$$I_{DS} = \frac{1}{2}\mu_n C_{ox}\frac{W}{L}\left(V_{in} - V_{TH}\right)^2$$

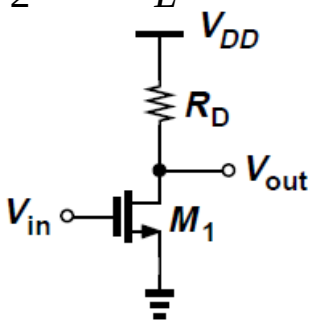

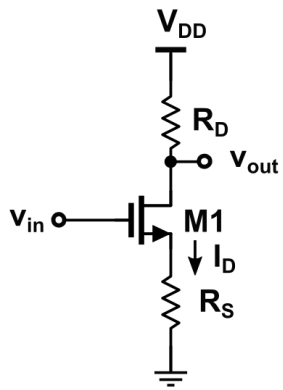

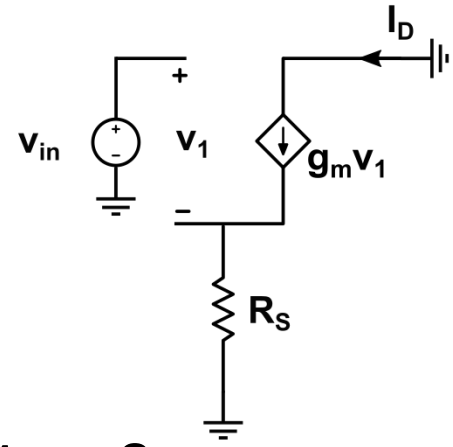

$$A_v = -\mu_n C_{ox}\frac{W}{L}\left(V_{in} - V_{TH}\right)R_D = g_m R_D$$

$$V_{in} = V_{GS} + I_D R_S$$

$$V_{out} = V_{DD} - I_D R_D$$

$$A_v = ?$$

- R_S in series with the source -> input device more linear
  - As V_{in} increases, so do I_D and the voltage drop across R_S

    Part of the change in V_{in} appears across R_S rather than gate-source overdrive, making variation in I_D smoother
  - **<u>Gain is now a weaker function of g_m</u>**

Large-signal Analysis

$$V_{out} = V_{DD} - I_D R_D \qquad A_V = \frac{\partial V_{out}}{\partial V_{in}} = -\frac{\partial I_D}{\partial V_{in}} \times R_D$$

Define $G_m = -\dfrac{\partial I_D}{\partial V_{in}}$ ➡ $A_V = -G_m \times R_D$

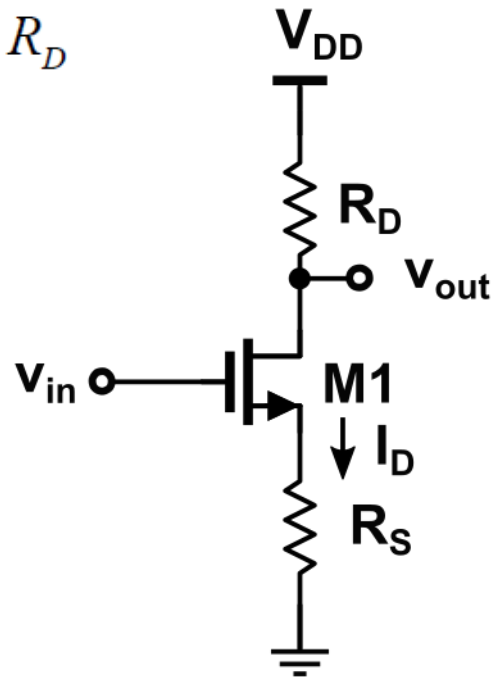

$$G_m = -\frac{\partial I_D}{\partial V_{in}} = -\frac{\partial I_D}{\partial V_{GS}}\frac{\partial V_{GS}}{\partial V_{in}} = -g_m \frac{\partial V_{GS}}{\partial V_{in}}$$

$$\because V_{in} = V_{GS} + I_D \times R_S$$

$$\frac{\partial V_{in}}{\partial V_{GS}} = 1 + \frac{\partial I_D}{\partial V_{GS}} \times R_S = 1 + g_m \times R_S$$

$$\therefore G_m = -g_m \frac{1}{1 + g_m R_s} = -\frac{1}{\frac{1}{g_m} + R_S} \qquad R_s \uparrow \Rightarrow G_m \downarrow$$

Trade-off

$$R_s >> 1/g_m \Rightarrow \Delta I_D = \frac{\Delta V_{in}}{R_S} \Rightarrow G_m = \frac{1}{R_s}$$

- **The cost of linearization: lower gain, lower swing**

Small-signal Analysis

$$V_{in} = V_1 + I_{out} R_S$$

$$I_{out} = g_m V_1 - g_{mb} V_X - \frac{I_{out} R_S}{r_O}$$

$$= g_m (V_{in} - I_{out} R_S) + g_{mb}(-I_{out} R_S) - \frac{I_{out} R_S}{r_O}$$

$$G_m = \frac{I_{out}}{V_{in}} = \frac{g_m r_O}{R_S + [1 + (g_m + g_{mb}) R_S] r_O}$$

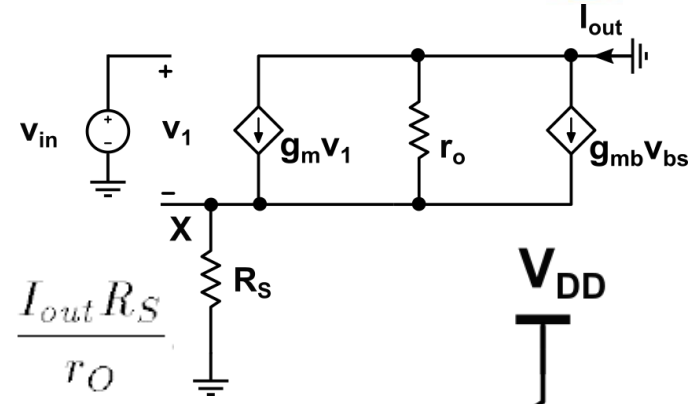

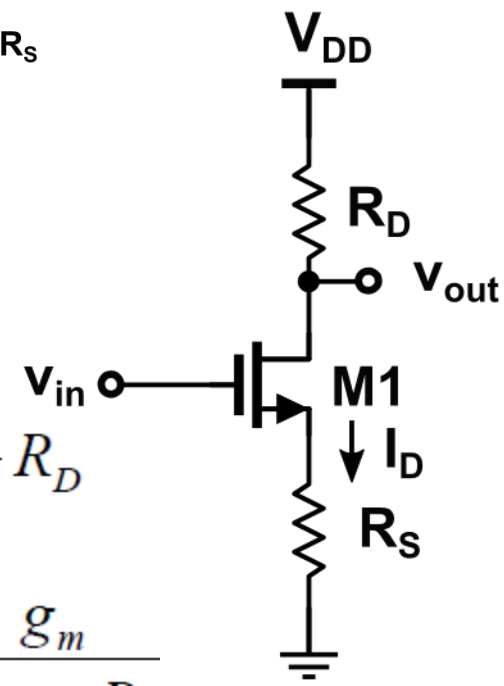

$$A_V = -G_m \times R_D = -\frac{g_m r_o}{R_s + [1 + (g_m + g_{mb}) R_s] r_o} R_D$$

When $r_O >> R_S$, $A_V \approx -\frac{g_m}{1 + g_m R_s} R_D$ $\quad G_m = -\frac{g_m}{1 + g_m R_s}$

Small-signal Analysis

$$A_V = -G_m \times R_D = -\frac{g_m r_o}{R_s + [1 + (g_m + g_{mb})R_s]r_o} R_D \approx -\frac{g_m}{1 + g_m R_s} R_D$$

(1) R_S=0 I_D and g_m vary with V_{in}

$$A_v = -g_{m1} R_D$$

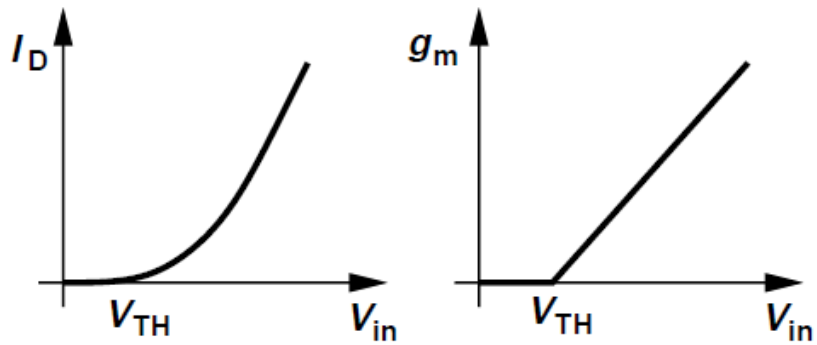

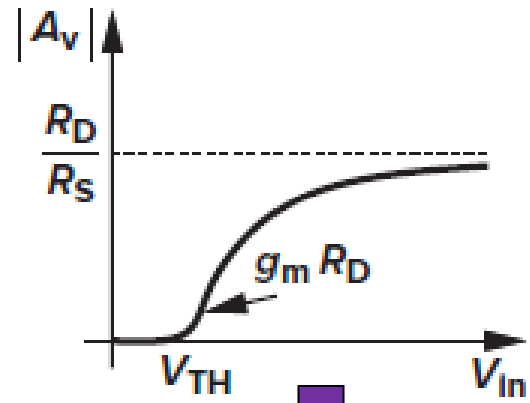

(2)R_S≠0

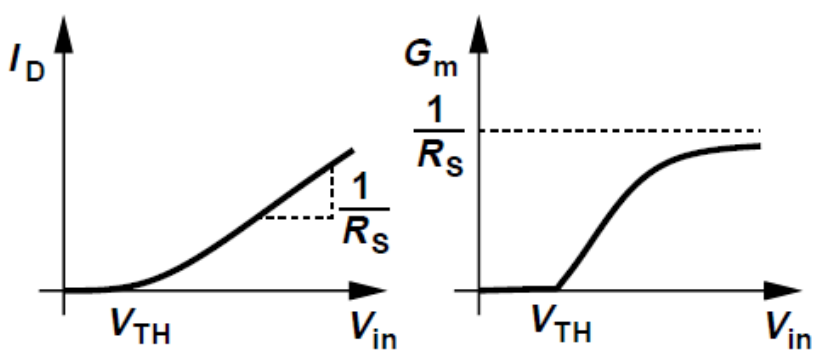

- V_{in} slightly great than V_{TH}, M1 is on,
- $1/g_m >> R_S$ $G_m \approx g_m$
- V_{in} ↑, $G_m = -\frac{g_m}{1 + g_m R_s}$
- V_{in} is very large, $R_S >> 1/g_m$ => $G_m = \frac{1}{R_s}$
- if $V_{in} > V_{out} - V_{TH}$, linear region, Av ↓

Output Resistance

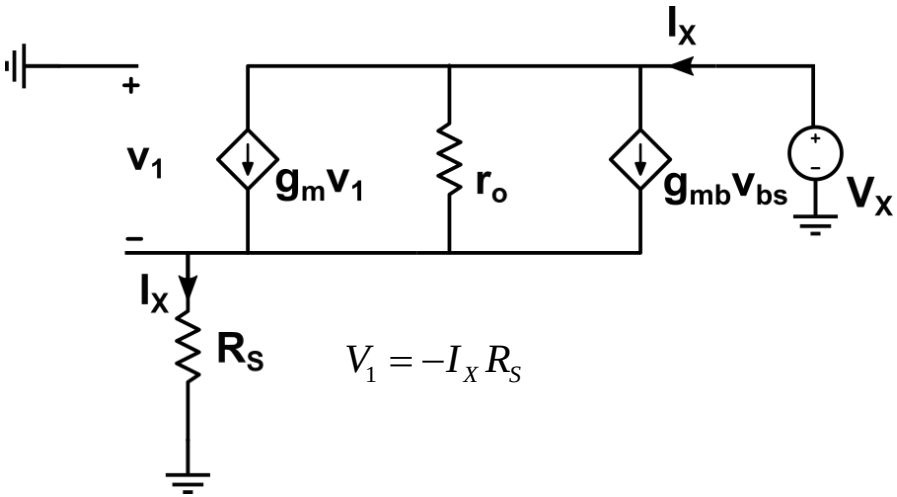

$$V_1 = -I_X R_S$$

$$I_X - (g_m + g_{mb})V_1 = I_X + (g_m + g_{mb})R_S I_X$$

KVL: $r_O\left[I_X + (g_m + g_{mb})R_S I_X\right] + R_S I_X = V_X$

$$R_{out} = \frac{V_X}{I_X} = \left[1 + (g_m + g_{mb})R_S\right]r_O + R_S$$

$$= \left[1 + (g_m + g_{mb})r_O\right]R_S + r_O$$

$$= r_O + R_S + (g_m + g_{mb})R_S r_O$$

- r_O is boosted by a factor of $1+(g_m+g_{mb})R_S$, then added R_S
- R_S is boosted by a factor of $1+(g_m+g_{mb})\, r_O$, then added r_O
- $if\left(g_m + g_{mb}\right)r_O > 1$ $\quad R_{out} \approx \left[1 + (g_m + g_{mb})R_S\right]r_O \approx g_m R_S r_O$

- Compare $R_S = 0$ with $R_S > 0$
- If $R_S = 0$, $g_m V_1 = g_{mb} V_{bs} = 0$ and $I_X = V_X / r_O$
- If $R_S > 0$, $I_X R_S > 0$ and $V_1 < 0$, obtaining negative $g_m V_1$ and $g_{mb} V_{bs}$
- Thus, current supplied by V_X is less than V_X/r_o and hence output impedance is greater than r_o

Small signal model of degenerated CS with finite output resistance

$$V_1 = V_{in} + V_{out} R_S / R_D$$

$$\begin{aligned} I_{ro} &= -\frac{V_{out}}{R_D} - (g_m V_1 + g_{mb} V_{bs}) \\ &= -\frac{V_{out}}{R_D} - \left[g_m \left(V_{in} + V_{out} \frac{R_S}{R_D} \right) + g_{mb} V_{out} \frac{R_S}{R_D} \right] \end{aligned}$$

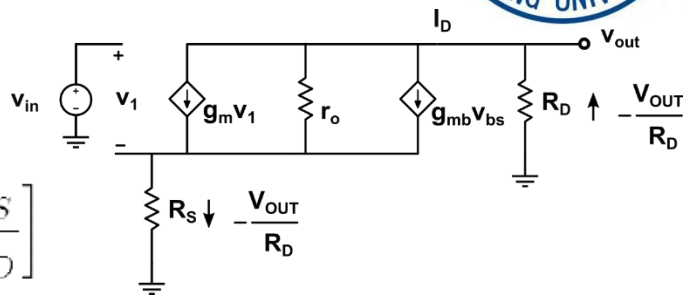

- Since voltage drops across r_O and R_S must add up to V_{out},

$$\begin{aligned} V_{out} &= I_{ro} r_O - \frac{V_{out}}{R_D} R_S \\ &= -\frac{V_{out}}{R_D} r_O - \left[g_m \left(V_{in} + V_{out} \frac{R_S}{R_D} \right) + g_{mb} V_{out} \frac{R_S}{R_D} \right] r_O - V_{out} \frac{R_S}{R_D} \end{aligned}$$

- voltage gain is therefore

$$\boxed{\frac{V_{out}}{V_{in}} = \frac{-g_m r_O R_D}{R_D + R_S + r_O + (g_m + g_{mb}) R_S r_O}}$$

$$A_V = -\frac{g_m r_o}{R_s + [1 + (g_m + g_{mb}) R_s] r_o} \frac{R_D \{ R_s + [1 + (g_m + g_{mb}) R_s] r_o \}}{R_D + R_s + [1 + (g_m + g_{mb}) R_s] r_o} = -G_m R_{out}$$

- **G_m: the transconductance when the output is shorted to ground**
- **R_{out}: the output resistance when the input voltage is set to zero**

Summary

- Two kinds of analysis method: **large-signal analysis** and **small-signal analysis**
- Small-signal analysis
  - Small-signal equivalent circuits
  - Based on the equivalent circuits, deduct the gain, the output impedance, …
- The main structures of common-source amplifier:

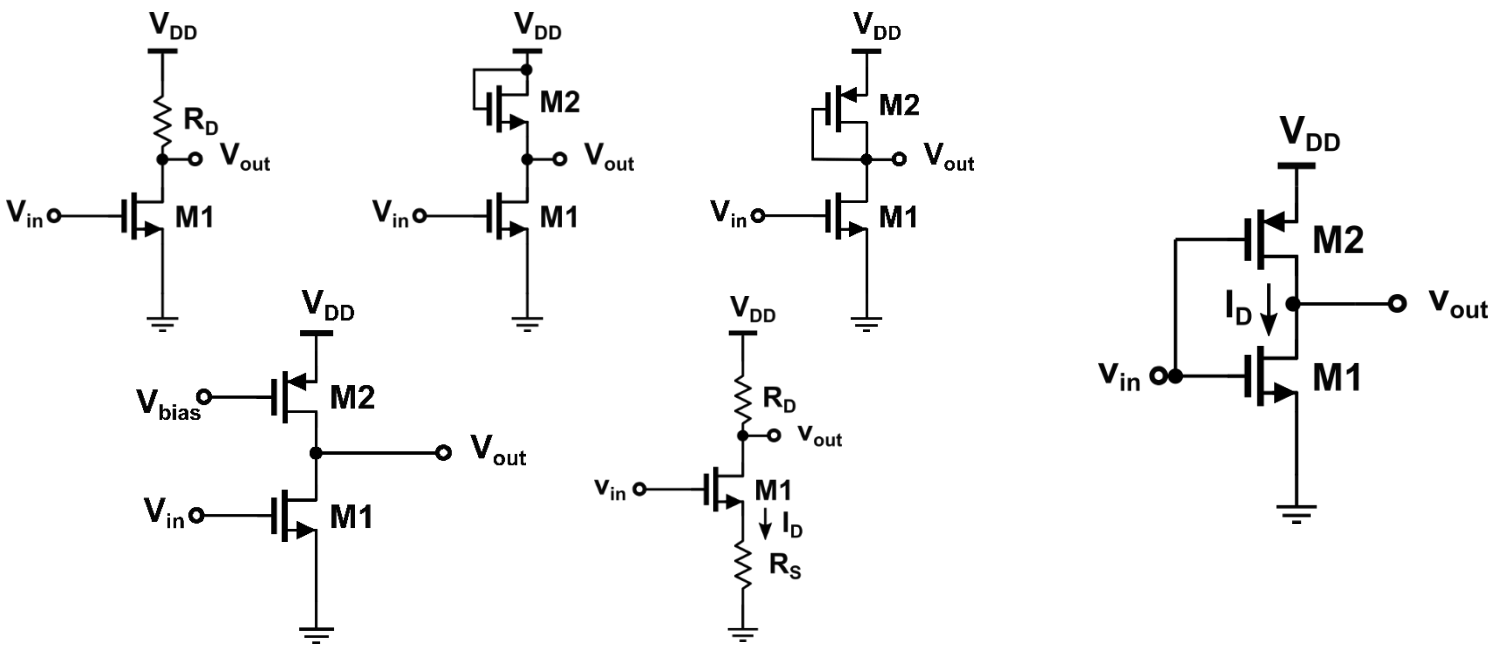

Outline

- General Consideration
- Common-Source Stage
  - CS Stage with Resistive Load
  - CS Stage with Diode-Connected Load
  - CS Stage with Current-Source Load
  - CS Stage with Source Degeneration
- Source Follower
- Common-Gate Stage

Source follower

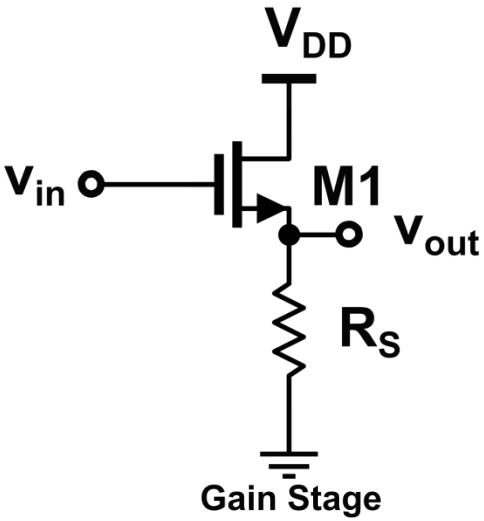

- Input voltage: V_{GD}
- Output voltage: V_{SD}

Main Features:

- High input impedance
- Low output impedance
- Allowing the "source" potential to follow the "gate" voltage ➡ $A_V \leq 1$,

  Voltage buffer -> Level shifter

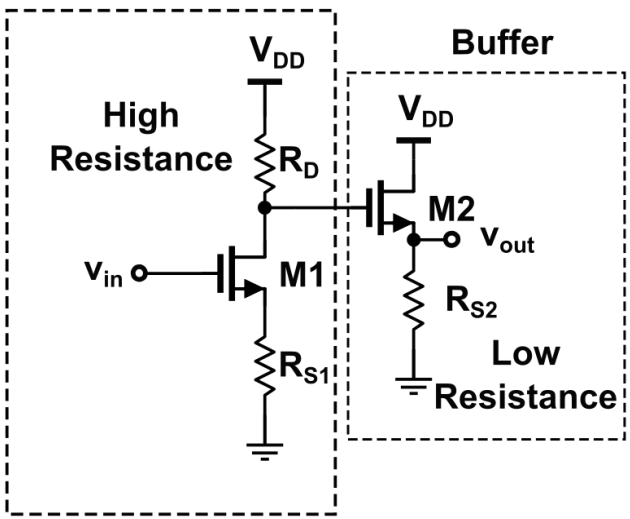

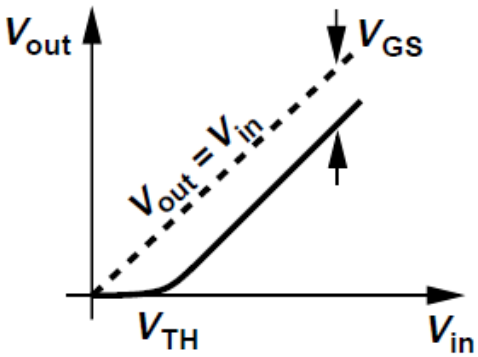

Large-signal analysis

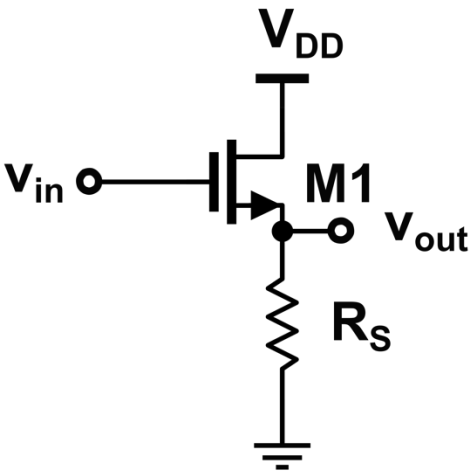

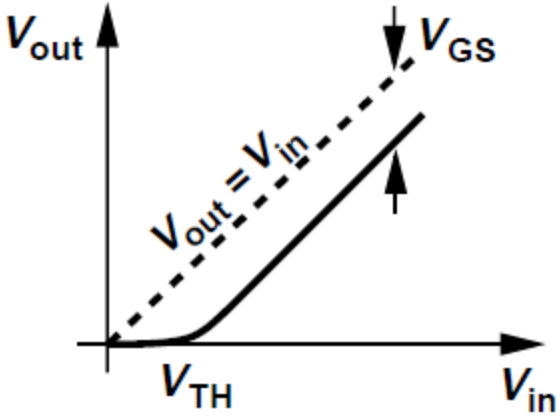

- $V_{in} < V_{TH}$: M_1 is off and $V_{out} = 0$
- $V_{in} > V_{TH}$: M_1 turns on in saturation

  $V_{DS} = V_{DD}$ and $V_{GS} - V_{TH} \approx 0$ and I_{D1} flows through R_S
- V_{in} increases further: $V_{out} = V_{in} - V_{GS}$ (**level shifter**)

$$\frac{1}{2}\mu_n C_{OX}\frac{W}{L}\left(V_{in} - V_{TH} - V_{out}\right)^2 R_S = V_{out}$$

neglecting channel-length modulation

Body effect?

Large-signal analysis

neglecting channel-length modulation

$$\frac{1}{2}\mu_n C_{OX}\frac{W}{L}\left(V_{in}-V_{TH}-V_{out}\right)^2 R_S = V_{out}$$

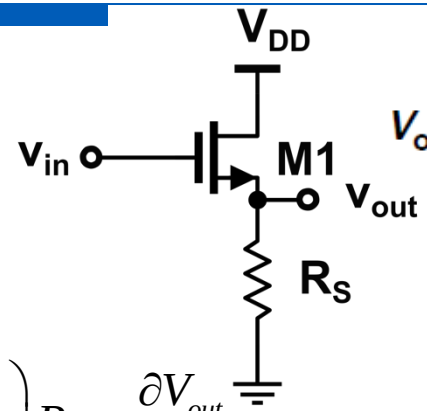

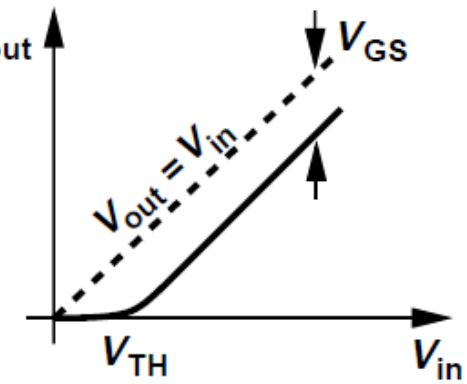

differentiating both sides:

$$\frac{1}{2}\mu_n C_{OX}\frac{W}{L}2\left(V_{in}-V_{TH}-V_{out}\right)\left(1-\frac{\partial V_{TH}}{\partial V_{in}}-\frac{\partial V_{out}}{\partial V_{in}}\right)R_S = \frac{\partial V_{out}}{\partial V_{in}}$$

$$\text{Q}\ \frac{\partial V_{TH}}{\partial V_{in}} = \frac{\partial V_{TH}}{\partial V_{SB}}\frac{\partial V_{SB}}{\partial V_{in}} = \eta\frac{\partial V_{out}}{\partial V_{in}} \qquad g_m = \mu_n C_{ox}\frac{W}{L}\left(V_{in}-V_{TH}-V_{out}\right)$$

$$\therefore \frac{\partial V_{out}}{\partial V_{in}} = \frac{\mu_n C_{ox}\frac{W}{L}\left(V_{in}-V_{TH}-V_{out}\right)R_S}{1+\mu_n C_{ox}\frac{W}{L}\left(V_{in}-V_{TH}-V_{out}\right)R_S\left(1+\eta\right)}$$

$$A_v = \frac{\partial V_{out}}{\partial V_{in}} = \frac{g_m R_S}{1+\left(g_m+g_{mb}\right)R_S} = \frac{g_m}{\frac{1}{R_S}+g_m+g_{mb}}$$

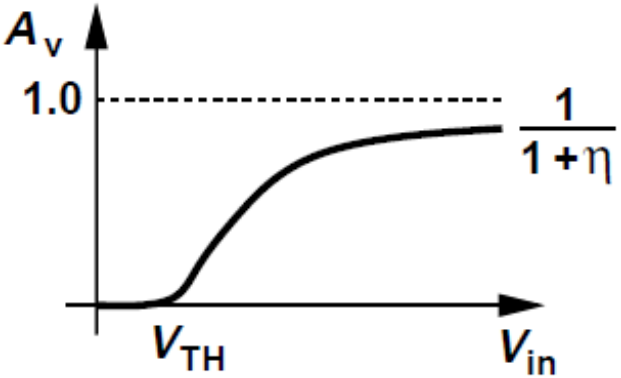

Small-signal analysis

A. Voltage Gain

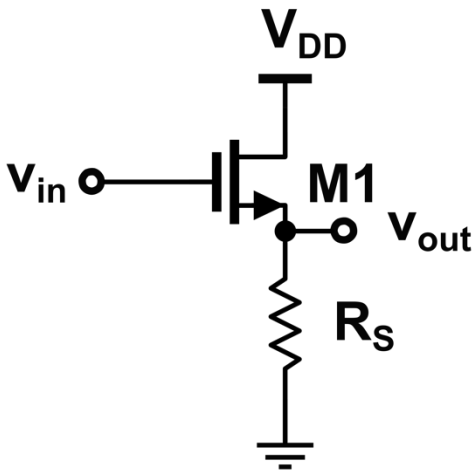

neglecting channel-length modulation

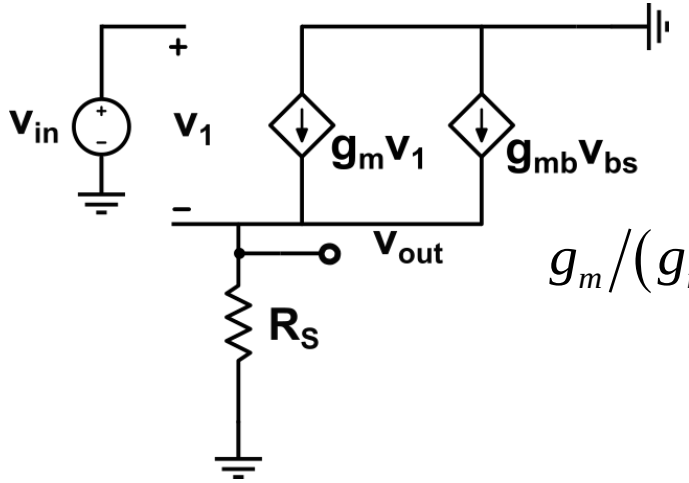

$$g_m/(g_m+g_{mb})=1/(1+\eta)$$

$$KVL: V_{in}-V_1=V_{out}, \quad V_{bs}=-V_{out}$$

$$KCL: g_m V_1 - g_{mb}V_{out} = V_{out}/R_S$$

$$A_v=\frac{\partial V_{out}}{\partial V_{in}}=\frac{g_m R_S}{1+(g_m+g_{mb})R_S}$$

Small-signal analysis

- **Nonlinear of Gain**

$$A_v = \frac{g_m R_S}{1+(g_m+g_{mb})R_S}$$

$$= \frac{1}{\frac{1}{g_m R_s}+\left(1+\frac{g_{mb}}{g_m}\right)} \approx \frac{1}{1+\eta} \le 1$$

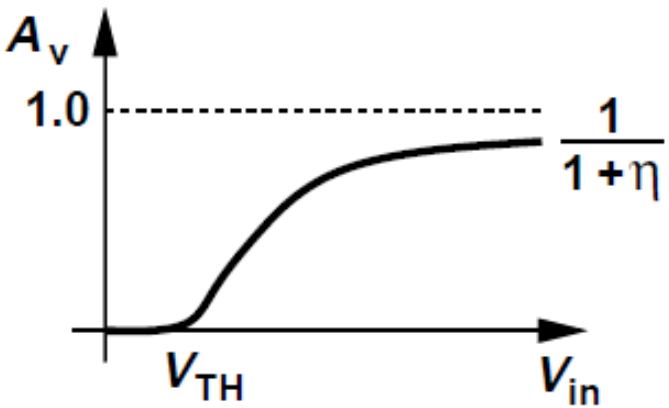

- For typical V_{SB}, $\eta \sim 0.2$
- Even if $R_S = \infty$, A_v is not equal to 1

How to improve the linearity of gain? current source => R_S

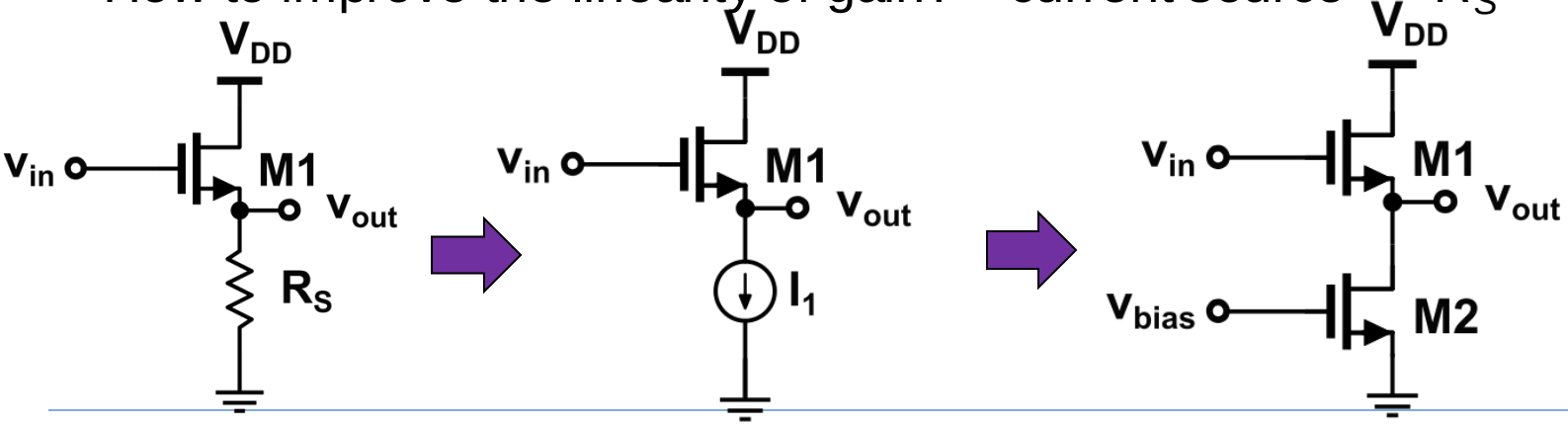

Small-signal analysis

B. Input impedance

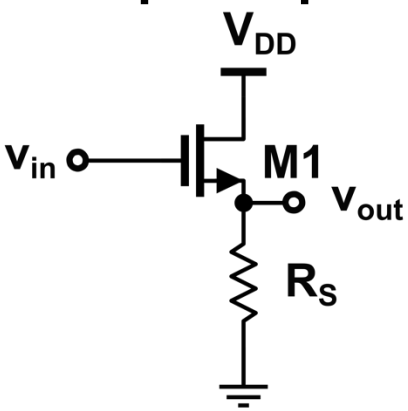

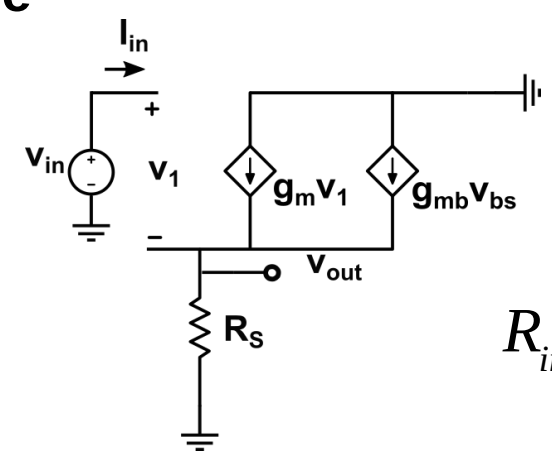

$$R_{in} = \frac{V_{in}}{I_{in}} \rightarrow \infty$$ (in low frequency)

C. Output impedance

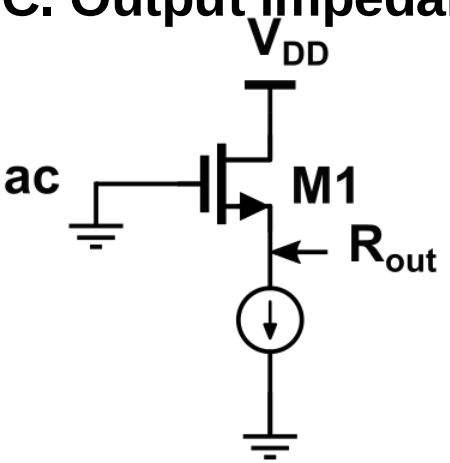

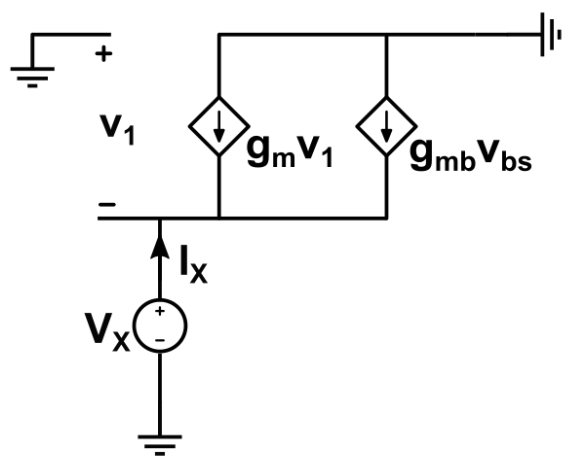

$$V_1 = -V_X$$

$$I_X - g_m V_X - g_{mb} V_X = 0$$

$$R_{out} = \frac{1}{g_m + g_{mb}} = \frac{1}{g_m} \Big\| \frac{1}{g_{mb}}$$

- Body effect decreases R_{out} of SF

High input impedance =>Low output impedance

Issues with Source follower

Drawback 1: Nonlinearity

- Nonlinear **dependence** of V_{TH} on the **source potential**
- r_O changes substantially with V_{DS}

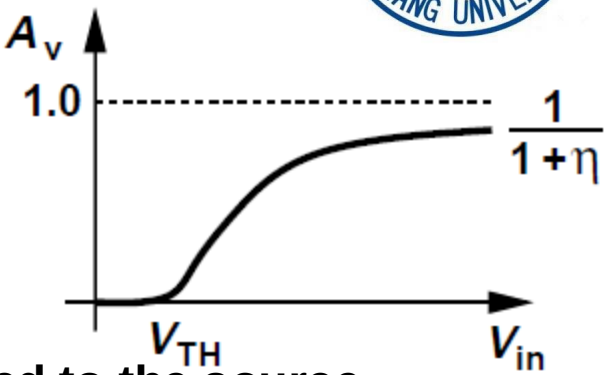

- **Nonlinearity can be eliminated if the bulk is tied to the source**
- Lower mobility of PFETs yields a higher output impedance than that available in the NMOS counterpart

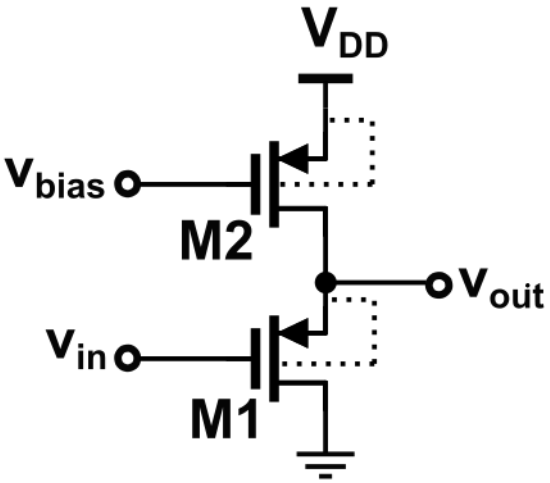

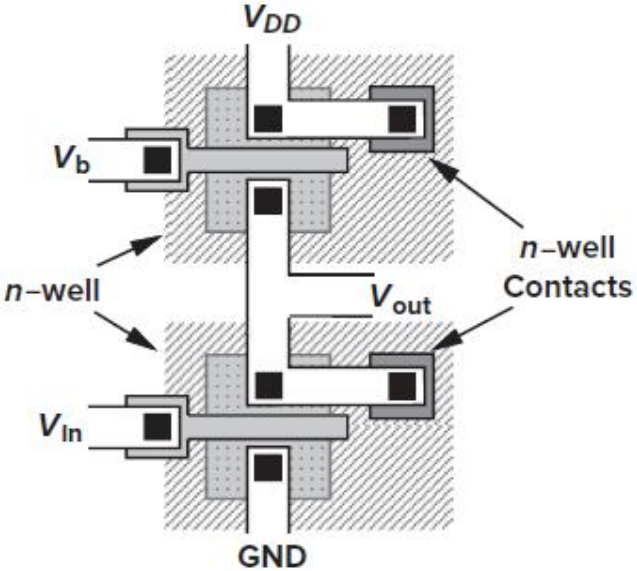

Possible only for PFETs since all NFETs usually share the same substrate

Issues with Source follower

- **Drawback 2: Voltage headroom limitation**
  - Source followers shift the DC level of V_{GS}, thereby consuming voltage headroom

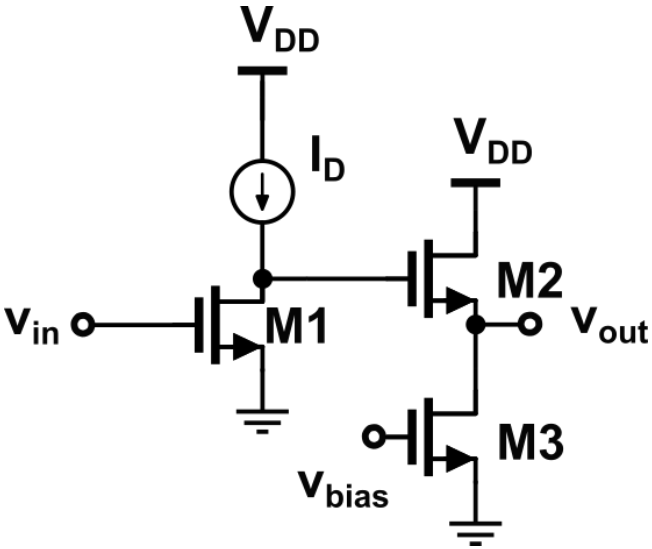

CS stage + Source follower

M_1 in saturation:

V_X (min) $> V_{GS1} - V_{TH1}$

M_2 M_3 : in saturation

V_X (min) $> V_{GS2} + (V_{GS3} - V_{TH3})$

  - **A DC level of V_{GS2}**
  - The voltage swing is decreased

Comparison of SF and CS with low load

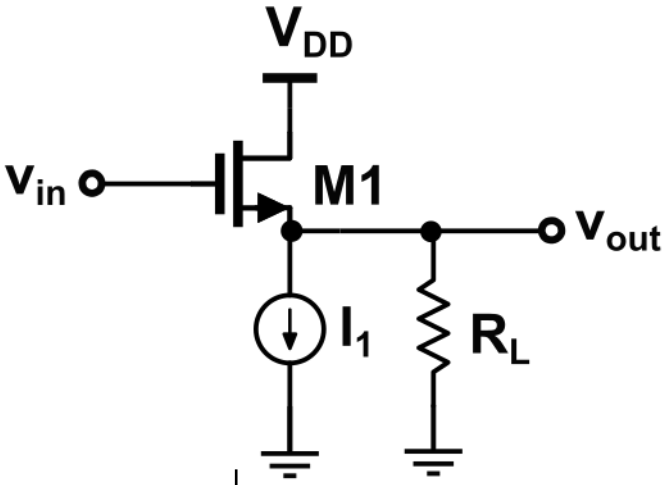

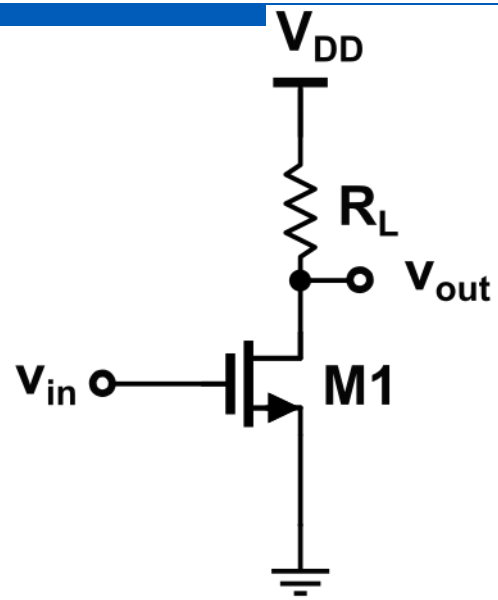

$$R_L = 50\Omega$$

$$\left.\frac{V_{out}}{V_{in}}\right|_{SF} \approx \frac{R_L}{R_L + 1/g_m}$$

if $R_L = 1/g_m$

$$\left.\frac{V_{out}}{V_{in}}\right|_{SF} = \frac{R_L}{R_L + 1/g_m} = 0.5 \qquad \left.\frac{V_{out}}{V_{in}}\right|_{CS} = -g_m R_L \approx 1$$

Source followers are not necessarily efficient drivers

Outline

- General Consideration
- Common-Source Stage
  - CS Stage with Resistive Load
  - CS Stage with Diode-Connected Load
  - CS Stage with Current-Source Load
  - CS Stage with Source Degeneration
- Source Follower
- Common-Gate Stage

Common-Gate Stage

- Input voltage: *source*
- Output voltage: *drain*
- Current buffer
- Low input impedance

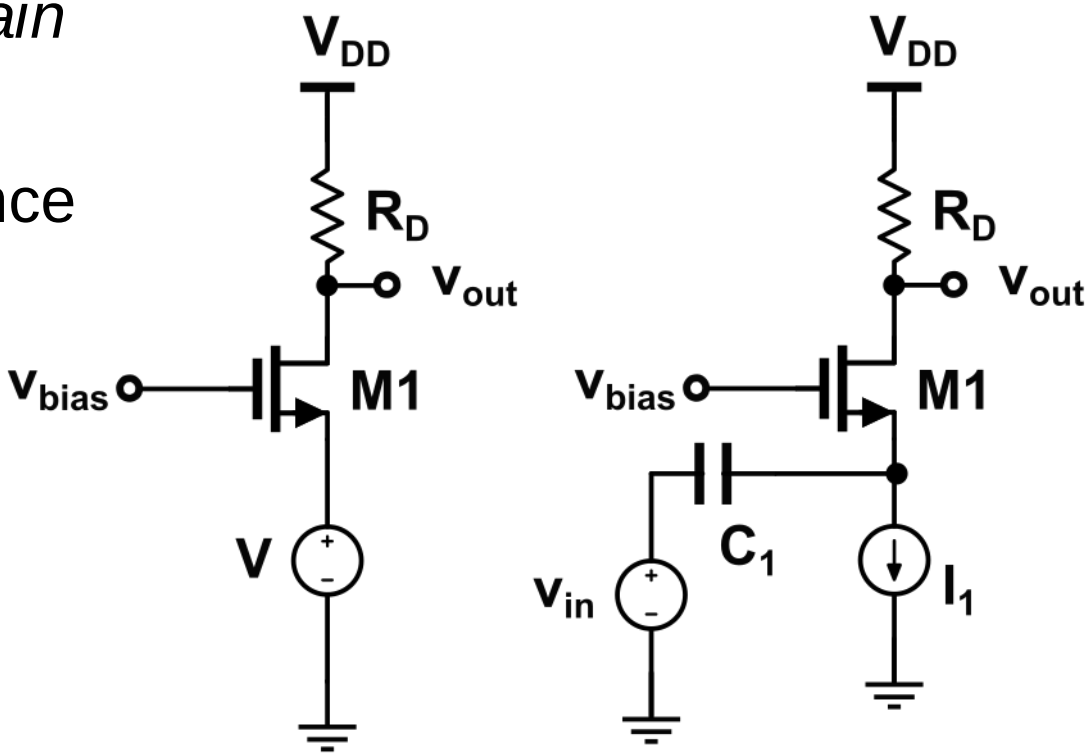

Large-signal analysis

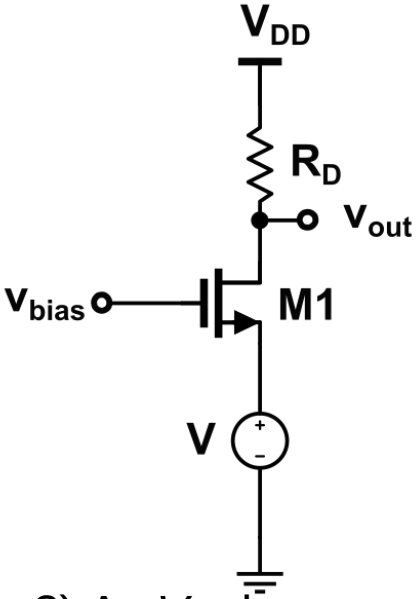

Assume V_{in} decreases from a large positive value and $\lambda=0$

1) $V_{in} \geq V_b - V_{TH}$: M_1 is off, $V_{out} = V_{DD}$

2) For lower V_{in}, M_1: in saturation $\quad I_D \uparrow, \quad V_{out} \downarrow$

$$I_D = \frac{1}{2}\mu_n C_{OX}\frac{W}{L}\left(V_b - V_{in} - V_{TH}\right)^2$$

$$V_{out} = V_{DD} - \frac{1}{2}\mu_n C_{OX}\frac{W}{L}\left(V_b - V_{in} - V_{TH}\right)^2 R_D$$

3) As V_{in} decreases further, $V_{GS1} \uparrow \Rightarrow I_D \uparrow, \quad V_{out} \downarrow$, M_1 : the triode region

$$V_{DD} - \frac{1}{2}\mu_n C_{OX}\frac{W}{L}\left(V_b - V_{in} - V_{TH}\right)^2 R_D = V_b - V_{TH}$$

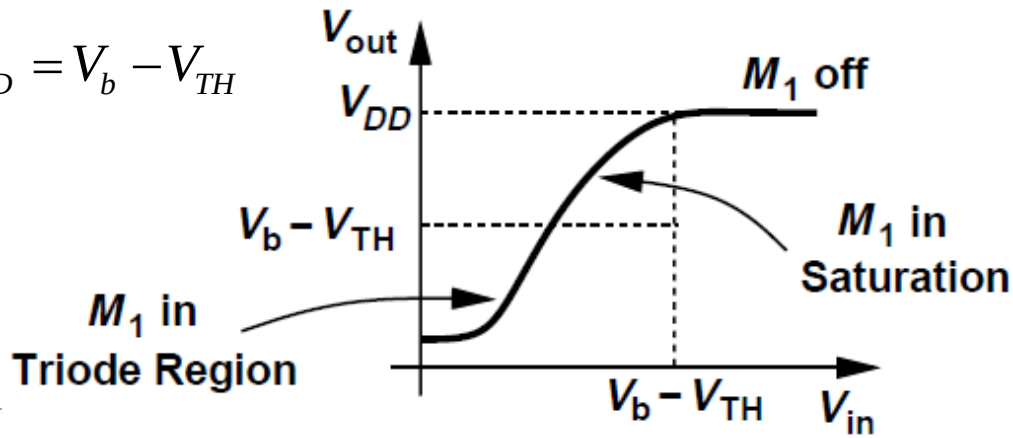

A. Input-output Characteristics

Large-signal analysis

B. Gain

- For M_1 in saturation,

$$V_{out} = V_{DD} - \frac{1}{2}\mu_n C_{OX}\frac{W}{L}\left(V_b - V_{in} - V_{TH}\right)^2 R_D$$

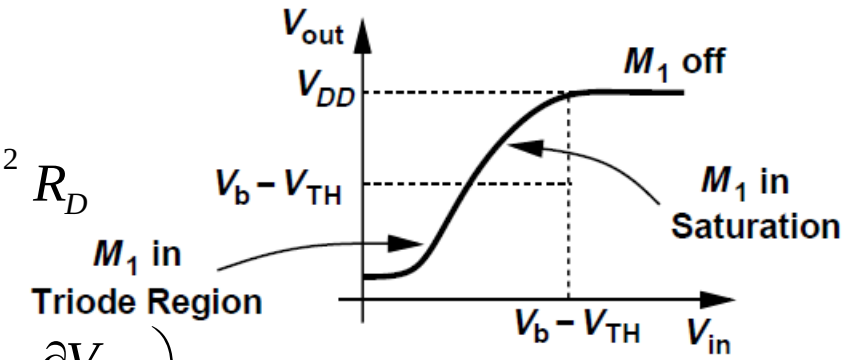

$$\frac{\partial V_{out}}{\partial V_{in}} = -\mu_n C_{OX}\frac{W}{L}\left(V_b - V_{in} - V_{TH}\right)\left(-1 - \frac{\partial V_{TH}}{\partial V_{in}}\right)R_D$$

$$\text{Q}\ \frac{\partial V_{TH}}{\partial V_{in}} = \frac{\partial V_{TH}}{\partial V_{SB}} = \eta$$

$$\therefore \frac{\partial V_{out}}{\partial V_{in}} = \mu_n C_{OX}\frac{W}{L}\left(V_b - V_{in} - V_{TH}\right)R_D\left(1+\eta\right) = g_m\left(1+\eta\right)R_D$$

! positive

- Body effect increases the effective g_m
- For a given bias current and supply voltage, A_V can be maximized by
  - -- Increasing g_m by widening the input device
  - -- Increasing R_D
- V_{out} (min)=V_{GS}-V_{TH}+V_{I1}, where V_{I1} denotes the minimum voltage required by I_1

Small-signal analysis

A. Gain

Current through R_S: $-V_{out}/R_D$,

$$V_1 - \frac{V_{out}}{R_D} R_S + V_{in} = 0$$

Current through r_O: $-V_{out}/R_D - g_m V_1 - g_{mb} V_1$

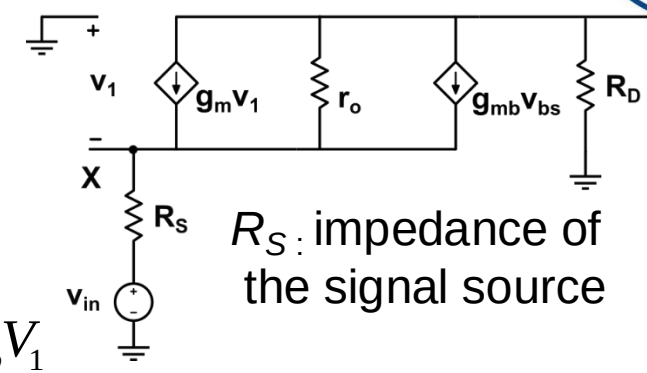

R_S: impedance of the signal source

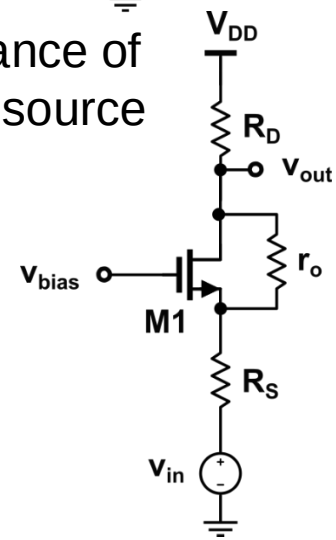

KVL:

$$r_O\left(-V_{out}/R_D - g_m V_1 - g_{mb} V_1\right) - \frac{V_{out}}{R_D} R_S + V_{in} = V_{out}$$

$$r_O\left[-\frac{V_{out}}{R_D} - \left(g_m + g_{mb}\right)\left(V_{out}\frac{R_S}{R_D} - V_{in}\right)\right] - \frac{V_{out}}{R_D} R_S + V_{in} = V_{out}$$

$$\frac{V_{out}}{V_{in}} = \frac{\left(g_m + g_{mb}\right) r_O + 1}{r_O + \left(g_m + g_{mb}\right) r_O R_S + R_S + R_D} R_D$$

Be similar to that of a degenerated CS stage

Small-signal Performance

B. Input impedance

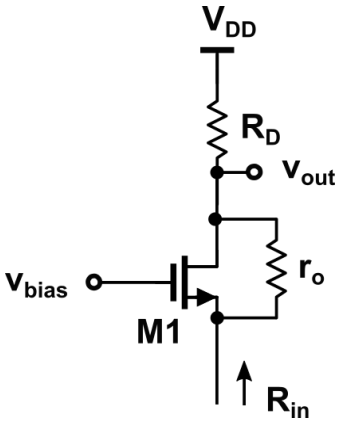

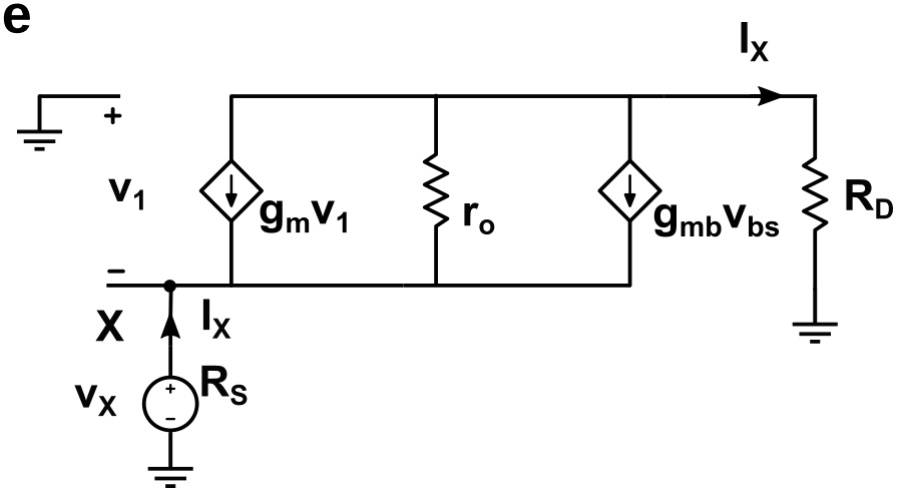

$V_1 = -V_X$

Current through r_O : $I_X + g_m V_1 + g_{mb} V_1 = I_X - (g_m + g_{mb}) V_X$, So

$$R_D I_X + r_O \left[I_X - (g_m + g_{mb}) V_X \right] = V_X$$

$$\frac{V_X}{I_X} = \frac{R_D + r_O}{1 + (g_m + g_{mb}) r_O} = \frac{1}{g_O + g_m + g_{mb}} \left(1 + \frac{R_D}{r_O} \right)$$

$$\approx \frac{R_D}{(g_m + g_{mb}) r_O} + \frac{1}{(g_m + g_{mb})}$$

if $(g_m + g_{mb}) r_O >> 1$

Output impedance

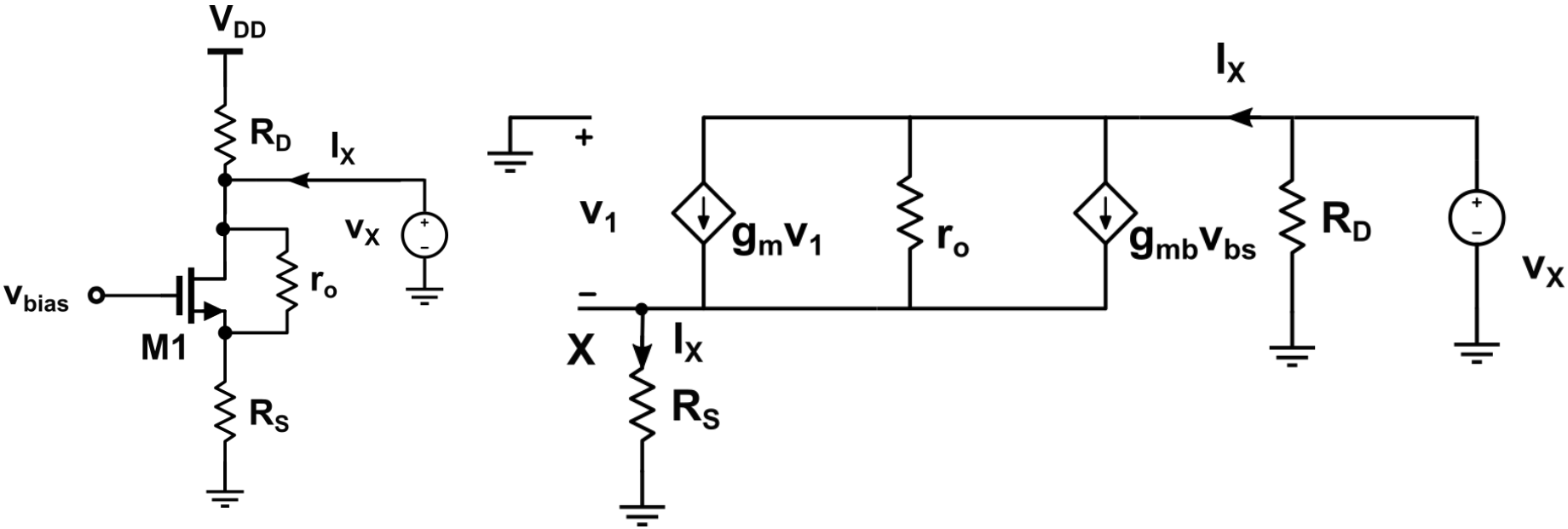

$$R_{out} = \left\{\left[1+\left(g_m + g_{mb}\right)R_S\right]r_O + R_S\right\} // R_D \approx \left(g_m R_S r_O\right) // R_D$$

- *Be similar to that of a degenerated CS stage*

Cascode Stage

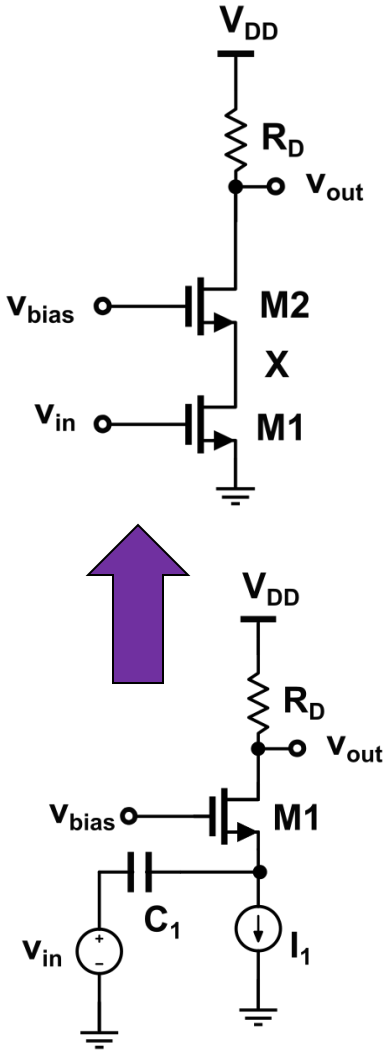

- **CS stage + CG stage**
- M_1 : the input device V_{in} -> $I_1 = g_{m1}V_{in}$
- M_2 : the cascode device, routing the current to R_D $I_1 = I_2$
- $V_{out} = V_{DD} - I_2 R_D$
- **telescopic cascode**

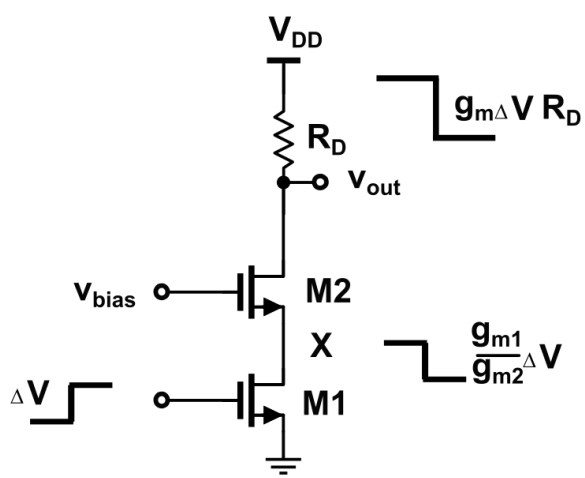

M_1, M_2 : in saturation $\lambda = \gamma = 0$

- V_{in}: ΔV ➡ I_{D1}: $g_{m1}\Delta V$
- V_X falls $g_{m1}\Delta V \cdot (1/g_{m2})$
- V_{out}: $g_{m1}\Delta V R_D$ as in a simple CS stage

Bias Conditions

M_1, M_2 : in saturation

- M_1 : in saturation, $V_X \geq V_{in} - V_{TH1}$

  If M_1 and M_2: both in saturation

  --M_2 operates as a source follower

  --V_X is determined by V_b: $V_X = V_b - V_{GS2}$

  $\Rightarrow$ $V_b - V_{GS2} \geq V_{in} - V_{TH1}$

  so $V_b \geq V_{GS2} + V_{in} - V_{TH1}$

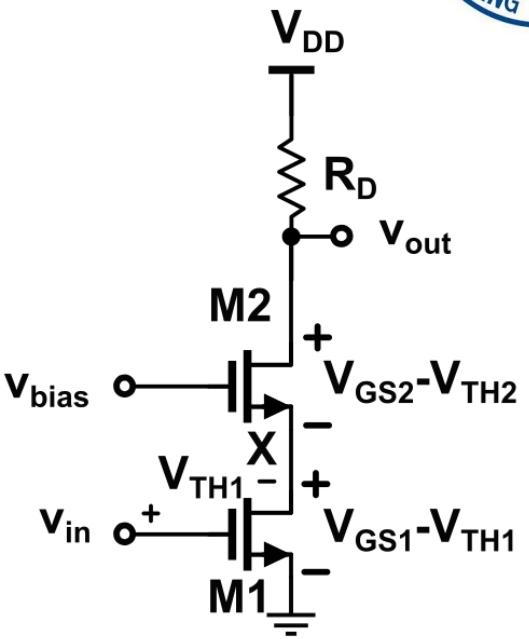

- M_2: in saturation, $V_{out} \geq V_b - V_{TH2}$

  if V_b is chosen to place M_1 at the edge of saturation

  $$V_{out} \geq V_{in} + V_{GS2} - V_{TH2} - V_{TH1} = (V_{GS1} - V_{TH1}) + (V_{GS2} - V_{TH2})$$

- Minimum output: $V_{ov1} + V_{ov2} \approx 2V_{ov}$ ~ 0.4-0.6V

  Reduce the output voltage swing (at least V_{ov})

Output Impedance

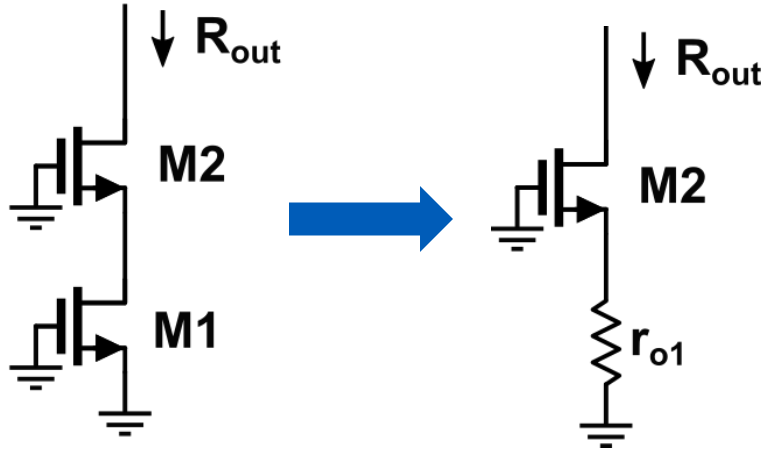

high output impedance!

- A common-source stage with a degeneration resistor (r_{O1})

$$R_{out} = \left[1+\left(g_{m2}+g_{mb2}\right)r_{O2}\right]r_{O1}+r_{O2}$$
$$\approx \left(g_{m2}+g_{mb2}\right)r_{O2}r_{O1}$$

assuming $g_m r_O >> 1$,

- M2 boosts the output impedance of M1 by a factor of $(g_{m2}+g_{mb2})r_{O2}$

$$A_v = -G_m R_{out}$$
$$= -g_{m1}\left[r_{O1}+r_{O2}+\left(g_{m2}+g_{mb2}\right)r_{O1}r_{O2}\right]$$
$$\approx g_{m1}g_{m2}r_{O1}r_{O2} \approx \left(g_m r_O\right)^2$$

How to get high voltage gain?

I_D: constant

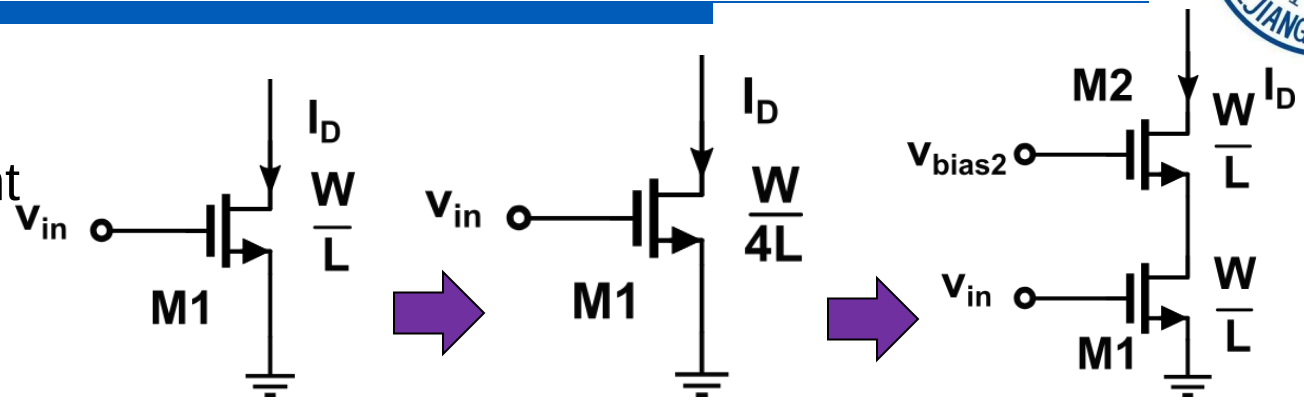

A. Increasing length of the input transistor

r_o: double

$$I_D = \frac{1}{2}\mu_n C_{ox}\frac{W}{L}\left(V_{GS} - V_{TH}\right)^2$$

V_{ov}: double, Swing ↓

$$g_m r_o = \sqrt{2\mu_n C_{ox}\frac{W}{L}I_D}\,\frac{1}{\lambda I_D}, \lambda \propto \frac{1}{L} \Rightarrow g_m r_o \propto \sqrt{L}$$

gain: double

B. Cascode stage

$$A_v \approx \left(g_m r_O\right)^2 \qquad r_O -> g_m r_O^{\,2}$$

Increase gain by $g_m r_O$

V_{ov}: double, Swing ↓

Cascode Stage with current source load

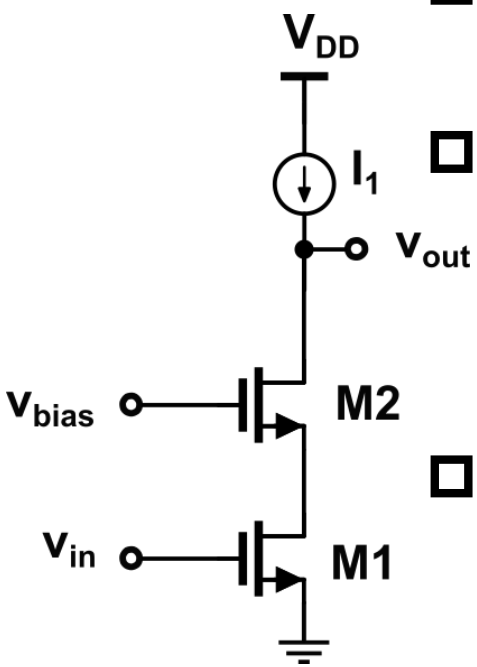

- How to get high voltage gain in Cascode stage?
  - maximizing G_m and/or R_{out}
- G_m
  - determined by g_m of a transistor
  - trade-offs: the bias current and device capacitances
- If both M_1 and M_2 operate in saturation

$$G_m = g_{m1}$$

$$R_{out} \approx (g_{m2} + g_{mb2}) r_{O2} r_{O1}$$

$$A_v \approx g_{m1}(g_{m2} + g_{mb2}) r_{O1} r_{O2} \approx (g_m r_O)^2$$

- Maximum gain is roughly equal to the square of the intrinsic gain of the transistors

Cascode vs. Cascade

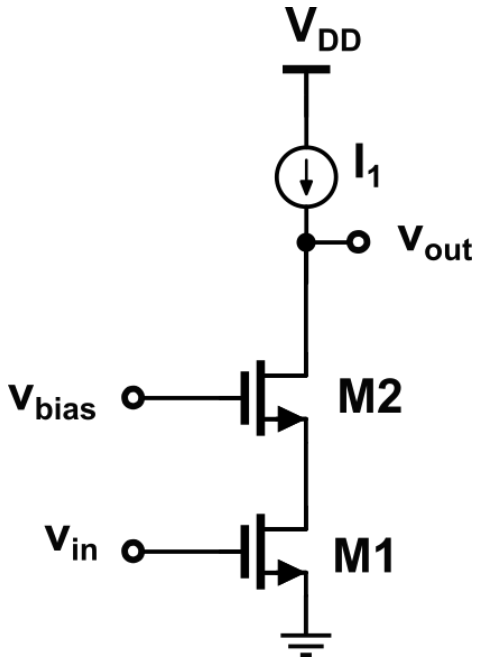

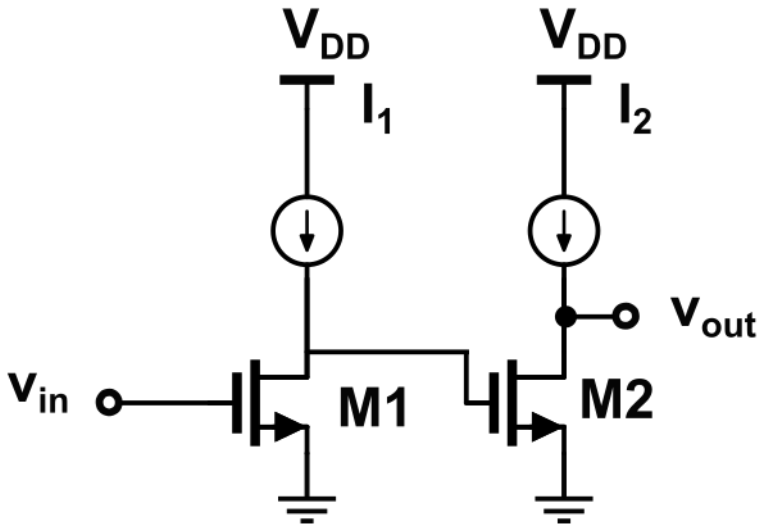

$A_v = (g_m r_{DS})_1 (g_m r_{DS})_2$ $A_v = (g_m r_{DS})_1 (g_m r_{DS})_2$

Trade-off between ? and ?

Cascode Structure as Current Source

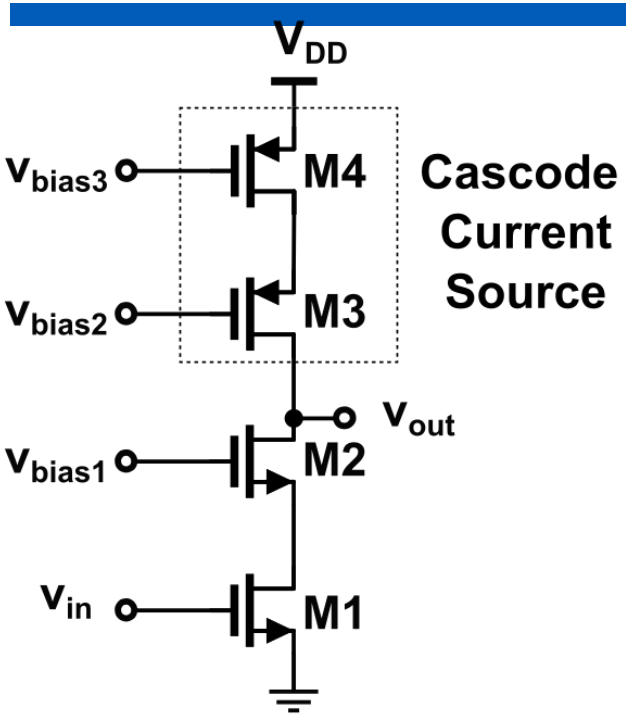

- High output impedance
- Low voltage headroom

- PMOS cascode

$$\left[1+\left(g_{m3}+g_{mb3}\right)r_{O3}\right]r_{O4}+r_{O3}$$

$$R_{out}=\left\{\left[1+\left(g_{m2}+g_{mb2}\right)r_{O2}\right]r_{O1}+r_{O2}\right\}\parallel\left\{\left[1+\left(g_{m3}+g_{mb3}\right)r_{O3}\right]r_{O4}+r_{O3}\right\}$$

$$\left|A_V\right|=g_{m1}R_{out}$$

$$A_V=g_{m1}\left[\left(g_{m2}r_{O2}r_{O1}\right)\parallel\left(g_{m3}r_{O3}r_{O4}\right)\right]$$

集成电路原理与设计
单级放大器

谭志超
zhichaotan@zju.edu.cn